Shihlin Electric General Inverters
SF3 Series
User Manual

High Functioning&High Performance

SF3-043-5.5K/3.7KG～355K/315KG

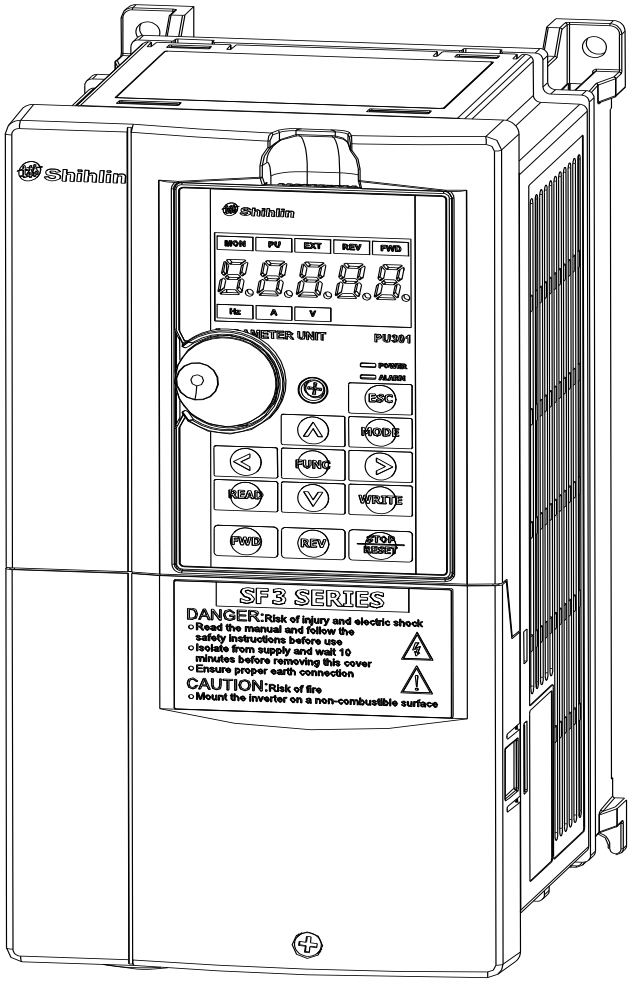

MANUAL GUIDE	1
DELIVERY CHECK	2
INVERTER INTRODUCTION	3
BASIC OPERATION	4
PARAMETER DESCRIPTION	5
INSPECTION AND MAINTENANCE	6
APPENDIX	7

1. MANUAL GUIDE

1.1 Safety instructions

Thank you for choosing Shihlin inverters SF3 series. This user manual introduces how to use the product correctly. Please read the user manual carefully before using the product. In addition, please use the product after understanding the safety instructions.

Safety Instructions
✓ **The qualified specialized person should be invited to install, operate, maintain and inspect the product.** ✓ **In the instruction book, the levels of the safety caution includes "Warning" and "Caution".** ⚠ **Warning:** the incorrect operation may cause hazardous situation, and accordingly lead to death or serious injury. ⚠ **Caution:** the incorrect operation may cause hazardous situation, and accordingly lead to general or minor injury or damage of the object.

⚠Warning
✓ The front cover plate and the wiring board should not be opened when the inverter is powered on. In addition, the inverter should not be operated when the front cover plate and the wiring board are demounted. Otherwise, the electric shock may be caused due to contacting with the high-voltage terminal and the charging part. ✓ If the wiring needs to be changed or inspection is required, the power supply of the inverter should be turned off first. There is still high voltage inside the inverter before the CHARGE light of the inverter is turned off. Therefore, please don't touch the internal circuit and parts. Operations cannot be implemented until the voltage measured with the volt-ohm-milliammeter is less than 24Vdc between +/P and -/N. ✓ The inverter must be earthed correctly. ✓ Please don't operate with the wet hand, don't touch the heat sink, and don't plug and unplug the cable; otherwise the electric shock may be caused. ✓ Do not replace the cooling fan when the inverter is powered on, otherwise the risk may occur. It is dangerous to replace the cooling fan when the inverter is powered on.

⚠Caution
✓ The voltage applied to each terminal must be the one specified in the user manual; otherwise, failure or damage may be caused. ✓ Do not implement the voltage-resistant test for the parts inside the inverter because the semiconductor taken by the inverter may be easily damaged due to high-voltage breakdown. ✓ Do not touch the inverter because the temperature of the inverter is very high when it is powered on or disconnected with the power supply shortly; otherwise, burn may occur. ✓ Do not connect with the terminal incorrectly; otherwise, the failure or damage may be caused. ✓ Do not get the polarities (+, -) by mistake, or the failure or damage may be caused. ✓ Please install the invert on the nonporous incombustible wall (to avoid contacting with the cooling fin of the inverter from the back). The fire may be caused if the inverter is installed on or close to the combustible articles directly. ✓ Please disconnect the power supply of the inverter in case of failure. If the overload current passes through the inverter continuously, the fire may be caused. ✓ Do not connect with the DC terminals +/P and -/N with the resistor directly; otherwise, the fire may be caused.

Other Precautions:

*1 If the product is ultimately used as a military unit, or when the product is used for weapons manufacturing, etc., this product will be included in the export product control object specified in the "Foreign Trade Law of the PRC". When exporting, strict inspection and export procedures are required.

*2 In this manual, the case or the safety cover will be removed, and the description will be made in graphics and text in order to explain the product in detail. When operating, to ensure safety be sure to install the case and wire correctly according to the regulations referred in the manual.

*3 Graphics in the manual are slightly different from the actual product for the convenience of illustrating, which will not affect customer rights.

*4 To improve our products, paremeters and contents may be modified in the future, and the contents of this manual are subject to change without notice. Please download the latest version from Shihlin website (www.sseec.com.cn or www.seec.com.tw).

1.2 Contents

User Manual ..... - 1 -
1. MANUAL GUIDE 1
1.1 Safety instructions 1
1.2 Contents 2
1.3 Definitions of terminologies 12
2.DELIVERY CHECK 14
2.1 Nameplate instruction 14
2.2 Model type instruction 14
2.3 Order code description 14
3. INVERTER INTRODUCTION 15
3.1 Electrical specification 15
3.2 General specification 17
3.3 Appearance and dimensions 18
3.3.1 Frame A 18
3.3.2 Frame B 19
3.3.3 Frame C 20
3.3.4 Frame D 21
3.3.5 Frame E 22
3.3.6 Frame F 23
3.3.7 Frame G 24
3.3.8 Frame H 25
3.4 Name of each component 26
3.4.1 Frame A/B/C 26
3.4.2 Frame D/E/F 26

3.4.3 Frame G/H 27

3.4.4 Protection level and operation temperature 27

3.5 Installation and wiring 28

3.5.1 Transportation 28

3.5.2 Storage 28

3.5.3 Installation notice 28

3.5.4 EMC installation instructions 30

3.5.5 Removal of the wiring front cover 31

3.6 Peripheral devices 33

3.6.1 System Wire Arrangement 33

3.6.2 No-fuse breaker and magnetic contactor 34

3.6.3 Regenerative Brake Resistor 35

3.6.4 Reactor 36

3.6.5 Filter 39

3.7 Terminal wire arrangement 40

3.7.1 Main Circuit Terminals 41

3.7.2 Main circuit wiring and terminal specification 43

3.7.3 Ground 44

3.7.4 RFI filter 45

3.7.5 Control circuit 47

3.8 Flange Installation Description 51

3.8.1 Frame A 51

3.8.2 Frame B 53

3.8.3 Frame C 54

3.8.4 Frame D/E/F/G/H 55

3.9 Conduit box kit 58

3.9.1 Frame D conduit box appearance 58

3.9.2 Frame E/F conduit box appearance 58

3.9.3 Frame G/H conduit box appearance 58

3.10 Replacement procedure of fan 59

3.10.1 Frame A 59

3.10.2 Frame B 59

3.10.3 Frame C 60

3.10.4 Frame D/E/F 60

3.10.5 Frame G/H 60

4. BASIC OPERATION 61

4.1 Component name of keypad(PU 301) 61

4.2 Operation modes of the inverter 63

4.2.1 Flow chart for switching the operation mode 64

4.2.2 Flow chart for switching the working mode with PU301 keypad 64

4.2.3 Operation flow charts for monitoring mode with PU301 keypad 64

4.2.4 Operation flow charts for frequency setting mode with PU301 keypad 65

4.2.5 Operation flow charts for parameter setting mode with PU301 keypad 65

4.3 Basic operation procedures for different modes 66

4.3.1 Basic operation procedures for PU mode (00-16 (P.79) = 0 or 1) 66

4.3.2 Basic operation procedures for external mode (00-16(P.79) = 0 or 2) 66

4.3.3 Basic operation procedures for JOG mode (00-16(P.79) = 0 or 1) 67

4.3.4 Basic operation procedures for communication mode (00-16(P.79) = 3) 67

4.3.5 Basic operation procedures for combined mode 1 (00-16(P.79) = 4) 67

4.3.6 Basic operation procedures for combined mode 2 (00-16(P.79) = 5) 67

4.3.7 Basic operation procedures for combined mode 3 (00-16(P.79) = 6) 68

4.3.8 Basic operation procedures for combined mode 4 (00-16(P.79) = 7) 68

4.3.9 Basic operation procedures for combined mode 5 (00-16(P.79) = 8) 68

4.3.10 Basic operation procedures for second operation mode (00-16(P.79) = 99999) 68

4.4 Running 69

4.4.1 Check and preparation before running 69

4.4.2 Running methods 69

4.4.3 Test run 70

5. PARAMETER DESCRIPTION 71

5.1 System parameter group 00 71

5.1.1 Inverter information 74

5.1.2 Parameter restoration 75

5.1.3 Parameter protection 77

5.1.4 Monitoring function selection 80

5.1.5 Running speed display 83

5.1.6 PWM carrier frequency 83

5.1.7 Stop operation selection 84

5.1.8 Forward/reverse rotation prevention selection 85

5.1.9 Operation mode selection 85

5.1.10 Motor control mode selection 86

5.1.11 Motor types selection 87

5.1.12 50/60Hz switch selection 87

5.1.13 Parameter mode setting 88

5.1.14 Expansion card type display 88

5.2 Basic parameter group 01 89

5.2.1 Limiting the output frequency 91

5.2.2 Base frequency, base voltage 92

5.2.3 Acceleration/deceleration time setting 93

5.2.4 Torque boost V/F 95

5.2.5 Starting frequency 96

5.2.6 Load pattern selection V/F 96

5.2.7 JOG running 99

5.2.8 Output frequency filter time 100

5.2.9 Frequency jump 100

5.2.10 The second function 101

5.2.11 Middle frequency, output voltage of middle frequency V/F 102

5.2.12 S pattern time 103

5.2.13 Remote function acc/dec time selection 105

5.3 Analog input and output parameter group 02 106

5.3.1 Function selection of analog terminal and HDI terminal 110

5.3.2 Function selection of analog output terminal AM 111

5.3.3 Proportion linkage gain 111

5.3.4 Auxiliary frequency selection 112

5.3.5 Selection and processing of terminal 2-5 input 113

5.3.6 Selection and processing of terminal 4-5 input 119

5.3.7 3-5 Selection and processing of terminal 3-5 input 121

5.3.8 Selection and processing of input terminal HDI 122

5.3.9 HDO frequency multiplication coefficient 123

5.3.10 Function selection of FM output 123

5.3.11 Selection and handling of output terminal AM1 124

5.3.12 Selection and handling of output terminal AM2 125

5.3.13 Display reference at the analog output 126

5.3.14 AM/FM fixed output level 126

5.3.15 PT100 level setting 127

5.3.16 FM calibration parameter 127

5.4 Digital input/output parameter group 03 129

5.4.1 Function selection of digital input 133

5.4.2 Function selection of digital output 139

5.4.3 Terminal logic selection 141

5.4.4 Output signal delay 142

5.4.5 Signal filtering of the digital input terminal 142

5.4.6 Digital input terminal power enable 143

5.4.7 Output frequency detection 144

5.4.8 Zero current detection 145

5.4.9 Function selection of expanded digital input terminal 146

5.4.10 Expanded digital input terminal logic selection 147

5.4.11 Function selection of expanded digital output terminal 147

5.4.12 Digital input/output terminal monitor 148

5.5 Multi-speed parameter group 04 150

5.5.1 16 Speeds 152

5.5.2 Programmed running mode 154

5.6 Motor parameter group 05 158

5.6.1 Automatic measurement of motor parameters 160

5.6.2 Motor parameter 162

5.6.3 The second motor parameter 163

5.7 Protection parameter group 06 165

5.7.1 Electronic thermal relay capacity 169

5.7.2 Current stalling protection 169

5.7.3 Regenerative brake 171

5.7.4 Decrease carrier protection setting 171

5.7.5 Over torque detection 173

5.7.6 Stall level when restart 173

5.7.7 Cooling fan operation mode 174

5.7.8 Input phase failure protection 174

5.7.9 Output short circuit protection selection 175

5.7.10 PTC protection selection 175

5.7.11 Maintenance alarm function 176

5.7.12 Leakage current to ground protection 176

5.7.13 Output phase failure protection 176

5.7.14 Low voltage protection 177

5.7.15 Regenerative brake operation level 177

5.7.16 Voltage stall operation level 177

5.7.17 Electrolytic capacitor lifetime detection 178

5.7.18 Time record function 179

5.7.19 Output power calculation 179

5.7.20 Alarm query function 180

5.7.21 Alarm code query 181

5.7.22 The latest alarm message (E1) 182

5.7.23 The second alarm message (E2) 183

5.7.24 Fire mode 184

5.8 Communication parameter group 07 188

5.8.1 Shihlin protocol and Modbus protocol 190

5.8.2 Communication EEPROM write selection 205

5.8.3 Canopen protocol 205

5.8.4 Communication expansion card version number 206

5.8.5 Ethernet communication 206

5.9 PID parameter group 08 207

5.9.1 PID function selection 210

5.9.2 PID parameter group 1 211

5.9.3 PID parameter group 2 215

5.9.4 PID filter setting 215

5.9.5 PID deviation control limit 216

5.9.6 PID integral property 216

5.9.7 PID differential limit 216

5.9.8 PID output deviation limit 217

5.9.9 PID parameter switchover 217

5.9.10 PID malfunction selection 218

5.9.11 PID reverse run operation selection 218

5.9.12 PID pressure range setting 219

5.9.13 PID unit selection 219

5.9.14 PID Analog signal feedback loss 220

5.10 Application parameter group 10 221

5.10.1 DC braking 225

5.10.2 Zero-speed/zero-servo control 226

5.10.3 DC brake before start 227

5.10.4 Start mode selection 228

5.10.5 Remote setting control function 230

5.10.6 Retry selection 233

5.10.7 The dead time of positive and reverse rotation 234

5.10.8 Energy-saving control function V/F 234

5.10.9 Dwell function V/F 235

5.10.10 Triangular wave function V/F 237

5.10.11 Power frequency operation function 238

5.10.12 Power failure stop function 241

5.10.13 VF complete separation 243

5.10.14 Regeneration and avoidance function 244

5.10.15 Over-excitation deceleration function 245

5.10.16 Short-circuit brake function at PM motor start 245

5.10.17 Built-in PLC function 246

5.11 Speed and torque control parameter group 11 248

5.11.1 Control parameter 250

5.11.2 IM motor estimated rotation speed low-pass filter time constant 251

5.11.3 PM motor setting 252

5.11.4 Torque limit 253

5.11.5 The second motor control parameter 254

5.11.6 The second PM motor setting 255

5.11.7 PM motor speed estimation observer parameters 255

5.11.8 Velocity loop adjuster parameter 256

5.11.9 Velocity loop output low-pass filter time constant 256

5.12 Special adjustment parameter group13 257

5.12.1 Slip compensation V/F 258

5.12.2 Modulation coefficient 258

5.12.3 Vibration inhibition 259

5.13 User parameter group 15 260

5.13.1 User registered parameter 261

5.14 Water Supply Parameter Group 16 263

5.14.1 Water supply parameters 265

6. INSPECTION AND MAINTENANCE 280

6.1 Inspection item 280

6.1.1 Daily inspection item 280

6.1.2 Periodical inspection items 280

6.1.3 Checking the converter and inverter modules 281

6.1.4 Cleaning 281

6.1.5 Replacement of parts 282

6.2 Measurement of main circuit voltages, currents and powers 283

6.2.1 Selection of instruments for measurement 283

6.2.2 Measurement of voltages 283

6.2.3 Measurement of currents 283

6.2.4 Measurement of power 283

6.2.5 Measurement of frequency 284

6.2.6 Measurement of insulation resistance 284

6.2.7 Hi-pot test 284

7. APPENDIX 285

7.1 Appendix 1: Parameter table 285

7.1.1 P parameter number sequence 285

7.1.2 Arrange by function group 316

7.2 Appendix 2: Alarm code list 347

7.3 Appendix 3: Troubleshooting 351

7.4 Appendix 4: Optional equipment 352

7.4.1 Communication card 352

7.4.2 I/O expansion card 356

7.4.3 Operation panel 358

7.4.4 Data transmission line 360

7.4.5 Snap mounting kit 360

7.4.6 BKU brake unit 361

7.5 Appendix 5: European specification compatibility description 362

8. Revision record 365

1.3 Definitions of terminologies

✓ Output frequency, target frequency, steady output frequency

- The frequency of the output current of the inverter is called “output frequency”

- The frequency set by user (via the keypad, multi-speed terminals, voltage signal, current signal and communication settings) is called “target frequency.”
- When the motor starts running, the output frequency of the inverter will gradually accelerate to the target frequency before it finally runs steadily at the target frequency. This output frequency is called “stead output frequency.”

✓ Parameter settings

- The parameter setting of the inverter shall be described detailedly in Chapter 5. When the user is not familiar with the parameter setting, the inverter may not run normally if the set value of the parameter is adjusted randomly. All parameters can be reset to their default values by setting parameter 00-02(P.998)=3.For setting procedures of this parameter, please refer to 00-02 (P.996 ~ P.999) in Section 5.1.2.

✓ The “operation mode” of the inverter and “working mode” of the keypad.

- The reference source of the target frequency and the source of the motor starting signal depend on the operation mode of the inverter.There are nine operating modes are provided in Shihlin inverter. Please refer to Section 4.3 for details.
- The keypad is used mainly for monitoring the numeric values, setting parameters and target frequency. There are 4 working modes on the Shihlin inverter’s keypad. Please refer to Section 4.2 for details.

✓ The difference between “terminal name” and “function name”:

- The characters are printed near the terminal of the control board of the inverter and near the terminal of the main circuit board, for differentiating all terminals from each other. These characters are called “terminal name”.
- As for the “Multi-function digital input terminal” and “Multi-function digital output terminal”, their “Function name” still must be defined except their terminal names. The function name is defined as the practical function of the terminal..
- When explaining the function for each terminal, the name used is its “function name”

✓ The difference between “on” and “turn on”:

- When describing the function for the “multi-function digital input terminal”, two words “on” and “turn on” are often used:
- The word “on” is used to describe that the external switch of the terminal is in close state, and belongs to the description of the state.
- The word “turn on” is used to describe the action that the external switch of the terminal is shut from the open state to the close state, and belongs to the description of action. Similarly, the words “off” and “turn off" belong to the descriptions of state and action, respectively..

2.DELIVERY CHECK

Each SF3-TYPE inverter has been checked thoroughly before delivery, and is carefully packed to prevent any mechanical damage. Please check for the following when opening the package.

- Check whether the product was damaged during transportation.
- Whether the model of the inverter is the same with what is shown on the package label.

2.1 Nameplate instruction

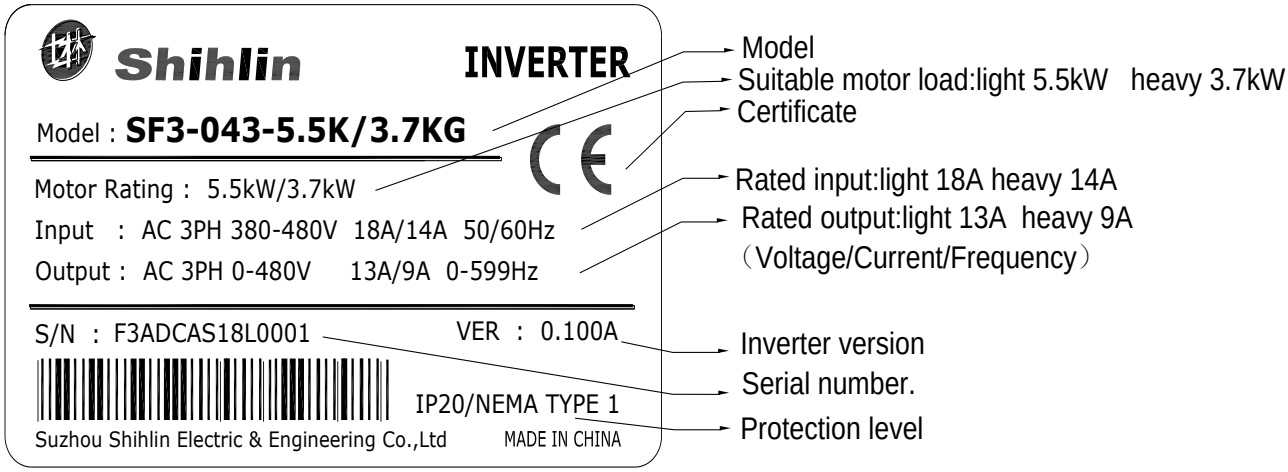

2.2 Model type instruction

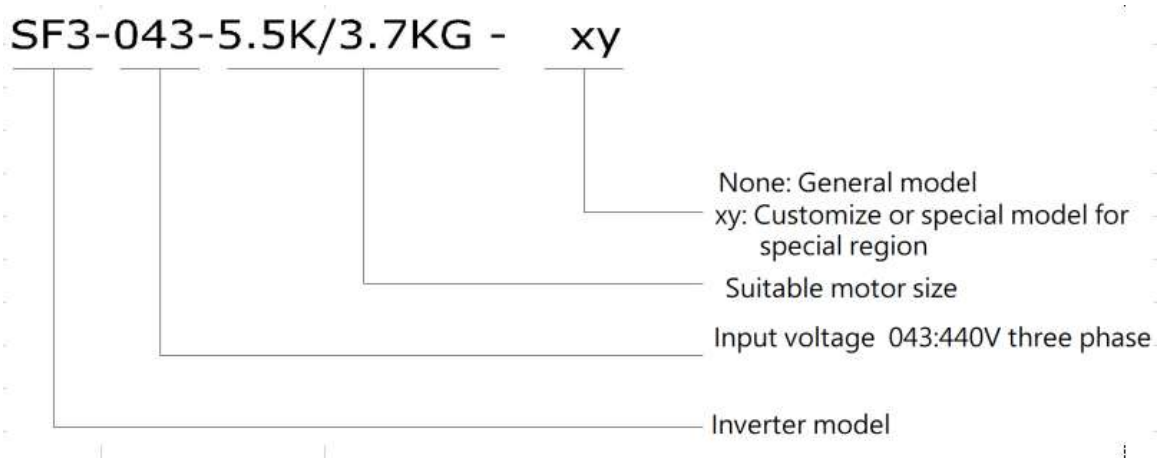

2.3 Order code description

Example:

Inverter specification	Specification description	Ordering code:
SF3-043-5.5K/3.7KG	SF3 series440V 3.7KW inverter	SNKSF30435R5F3R7G
SF3-043-11K/7.5KG	SF3 series440V 7.5KW inverter	SNKSF304311F7R5G
SF3-043-18.5K/15KG	SF3 series440V 15KW inverter	SNKSF304318R5F15G

3. INVERTER INTRODUCTION

3.1 Electrical specification

440V series three-phase

Frame			A		B			C				D		
Mode SF3-043-□K□KG-xy			5.5/ 3.7	7.5/ 5.5	11/ 7.5	15/ 11	18.5/ 15	22/ 18.5	30/ 22	37/ 30	45/ 37	55/ 45	75/ 55	90/ 75
Output(*1)	ND	Rated output capacity (kVA)	10	14	18	25	29	34	46	56	69	84	114	137
		Rated output current(A)	13	18	24	32	38	45	60	73	91	110	150	180
		Applicable motor capacity (HP)	7.5	10	15	20	25	30	40	50	60	75	100	120
		Applicable motor capacity (kW)	5.5	7.5	11	15	18.5	22	30	37	45	55	75	90
		Overload current rating	120% 60 seconds (inverse time characteristics)											
		Carrier frequency(kHz)	1 ~ 15kHz					1~10kHz						
	HD	Rated output capacity (kVA)	6.9	10	14	18	25	29	34	46	56	69	84	114
		Rated output current(A)	9	13	18	24	32	38	45	60	73	91	110	150
		Applicable motor capacity (HP)	5	7.5	10	15	20	25	30	40	50	60	75	100
		Applicable motor capacity (kW)	3.7	5.5	7.5	11	15	18.5	22	30	37	45	55	75
		Overload current rating	150% 60 seconds (inverse time characteristics)											
		Carrier frequency (kHz)	1~15kHz											
	Maximum output voltage		Three-phase 380-480V											
Power supply	Rated power voltage		Three-phase 380-480V 50Hz / 60Hz											
	Allowable fluctuating range of power voltage		Three-phase 342-528V 50Hz / 60Hz											
	Allowable fluctuating range of power frequency		±5%											
	Power capacity(kVA)		10.4	11.5	16	20	27	32	41	52	65	79	100	110
	Rated input current (A)(*2)	ND	18	21	26	35	40	47	67	74	101	114	157	167
		HD	14	18	21	26	35	40	47	67	74	101	114	157
Cooling method			Forced air cooling											
Inverter weight (kg)			3	3	6	6	6	10	10	10	11	25	26	30

Frame			E		F		G			H	
Mode SF3-043-□K□KG-xy			110/90	132/110	160/132	185/160	220/185	250/220	280/250	315/280	355/315
Output (*1)	ND	Rated output capacity (kVA)	168	198	236	295	367	402	438	491	544
		Rated output current(A)	220	260	310	340	425	480	530	620	683
		Applicable motor capacity(HP)	150	175	215	250	300	335	375	420	475
		Applicable motor capacity (kW)	110	132	160	185	220	250	280	315	355
		Overload current rating	120% 60 seconds (inverse time characteristics)								
		Carrier frequency (kHz)	1 ~ 9kHz				1~4kHz				
	HD	Rated output capacity (kVA)	137	168	198	236	295	367	402	438	491
		Rated output current(A)	180	220	260	310	340	425	480	530	620
		Applicable motor capacity (HP)	120	150	175	215	250	300	335	375	420
		Applicable motor capacity (kW)	90	110	132	160	185	220	250	280	315
		Overload current rating	150% 60 seconds (inverse time characteristics)								
		Carrier frequency (kHz)	1 ~ 10kHz				1~4kHz				
	Maximum output voltage		Three-phase 380-480V								
Power supply	Rated power voltage		Three-phase 380-480V 50Hz / 60Hz								
	Allowable fluctuating range of power voltage		Three-phase 342-528V 50Hz / 60Hz								
	Allowable fluctuating range of power frequency		±5%								
	Power capacity (kVA)		137	165	198	247	295	367	402	438	491
	Rated input current (A)(*2)	ND	207	240	300	380	400	500	550	650	700
		HD	167	207	240	300	380	400	500	550	650
Cooling method			Forced air cooling								
Inverter weight (kg)			38	39	56	56	93	93	93	120	120

*1: The test conditions of rated output current, rated output capacity and frequency converter inverter power consumption are: the carrier frequency (P.72) is default setting; the frequency inverter output voltage is at 440V; the output frequency is at 60Hz, and the surrounding temperature is 40℃.

*2 : The value indicates the current at rated output. The rated input current value is not only affected by power transformer, input side reactor, wiring condition, but also fluctuates with the impedance of the power supply side.

3.2 General specification

Control method		SVPWM control, V/F control, general flux vector control, sensorless vector control (SVC)
Output frequency range		0~599Hz (*1)
Frequency setting resolution	Digital setting	The resolution is 0.01 Hz when the frequency is set within 100 Hz; The resolution is 0.1 Hz when the frequency is set at above 100 Hz;
	Analog setting	11bit, DC 0~±5V or 4~20mA signal setting 12bit, DC 0~±10V signal setting
Output frequency accuracy	Digital setting	Maximum target frequency±0.01%.
	Analog setting	Maximum target frequency±0.1%.
Speed control range		IM: When SVC, 1:200; PM: When SVC,1:20;
Start torque		150% 0.5Hz (SVC) 。
V/F characteristics		Constant torque curve, variable torque curve, five-point curve, VF separation
Acceleration / deceleration curve characteristics		Linear acceleration /deceleration curve, S pattern acceleration /deceleration curve1 & 2 & 3
Drive motor		Induction motor(IM), permanent magnet motor(SPM, IPM)
Current stall protection		The stall protection level can be set to 0~200%(06-01(P.22)). The default value is 120%(ND)/150%(HD).
Target frequency setting		Keypad setting, DC 0~5V/10V signal, DC -10~+10V signal, DC 4~20 mA signal, multi-speed stage level setting, communication setting, HDI setting.
PID control		Please refer to Parameter Group 08 in chapter 5.
Built-in simple PLC		Supports 21 basic instructions and 14 application instructions, including PC editing software (refer to the instruction book of the built-in PLC);
Operation Panel	Operation monitoring	Output frequency, output current, output voltage, PN voltage, output torque, electronic thermal accumulation rate, temperature rising accumulation rate, output power, analog value input signal, external terminal status…; at most 12 groups of alarm records, the last group of alarm message is recorded.
	LED indicator(8 pcs)	Forward rotation indicator, reverse rotation indicator, frequency monitoring indicator, voltage monitoring indicator, current monitoring indicator, mode switch indicator, PU control indicator and external terminal control indicator.
Communication function		RS485 communication, choose SHIHLIN or Modbus communication protocol, and the communication rate can reach 115200bps. With CANopen, Profibus, DeviceNet, EtherCAT, Ethernet high-speed communication CARDS.
Protection mechanism /alarm function		Output short circuit protection, over-current protection, over-voltage protection, under-voltage protection, motor over-heat protection (06-00(P.9)), IGBT module over-heat protection, communication abnormality protection, PTC temperature protection etc. Capacitor overheat, input and output phase loss, to-earth (ground) current leakage protection, circuit error detection…
Environment	Ambient temperature	-10 ~ +40℃ (non-freezing) Set “fixed rated current, reduce carrier frequency with increasing temperature" or "fixed carrier frequency, reduce rated current with increasing carrier frequency".
	Ambient humidity	Below 90%Rh (non-condensing).
	Storage temperature	-20 ~ +65℃。
	Surrounding environment	Indoor, no corrosive gas, no flammable gas, no flammable powder.
	Altitude	Altitude below 2000 meters, but when altitude is above 1,000 m, 2% of the rated current needs to be decreased per 1000 rising
	Vibration	Vibration below 5.9m/s2 (0.6G).
	Grade of protection	IP20 for frames A, B and C, IP00 for frame D and above (IP20 accessories shall be optional)..
	The degree of environmental pollution	2
	Class of protection	Class I
International certification		CE

*1: Even if the frequency related parameter setting is greater than 599Hz, the actual output frequency upper limit is still 599Hz.

3.3 Appearance and dimensions

3.3.1 Frame A

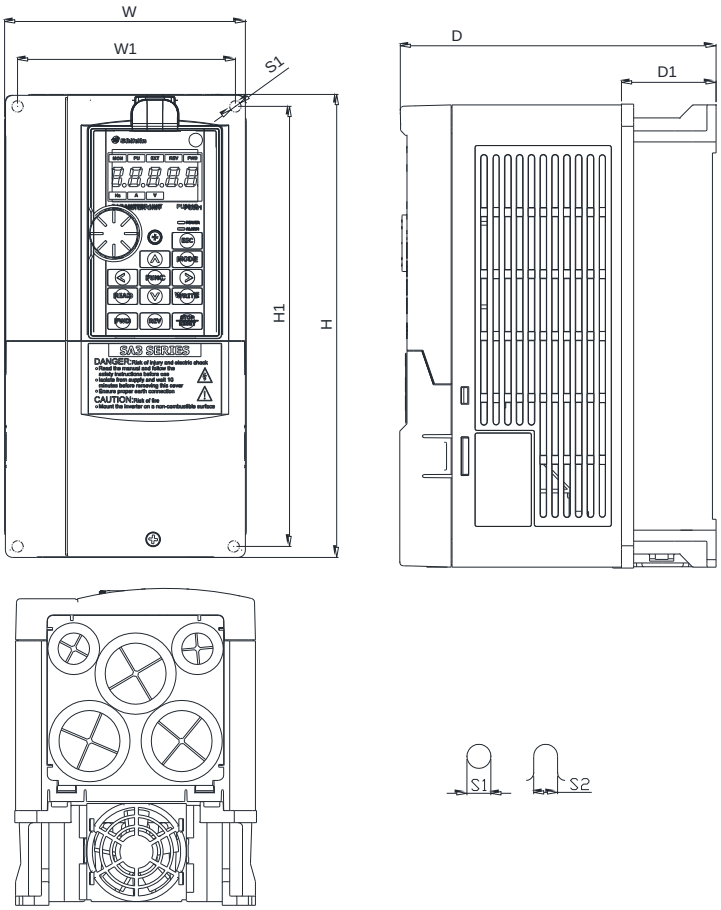

Unit:mm

Model	W	W1	H	H1	D	D1	S1	S2
SF3-043-5.5K/3.7KG	130.0	116.0	250.0	236.0	170.0	51.3	6.2	6.2
SF3-043-7.5K/5.5KG								

3.3.2 Frame B

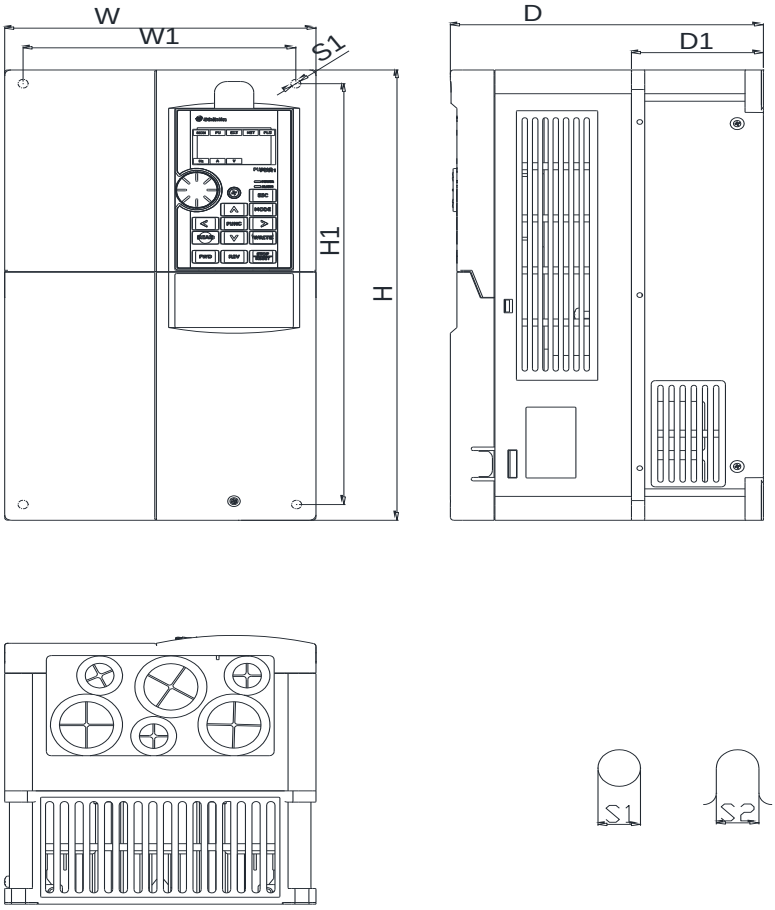

Unit:mm

Model	W	W1	H	H1	D	D1	S1	S2
SF3-043-11K/7.5KG	190.0	173.0	320.0	303.0	190.0	80.5	8.5	8.5
SF3-043-15K/11KG								
SF3-043-18.5K/15KG								

3.3.3 Frame C

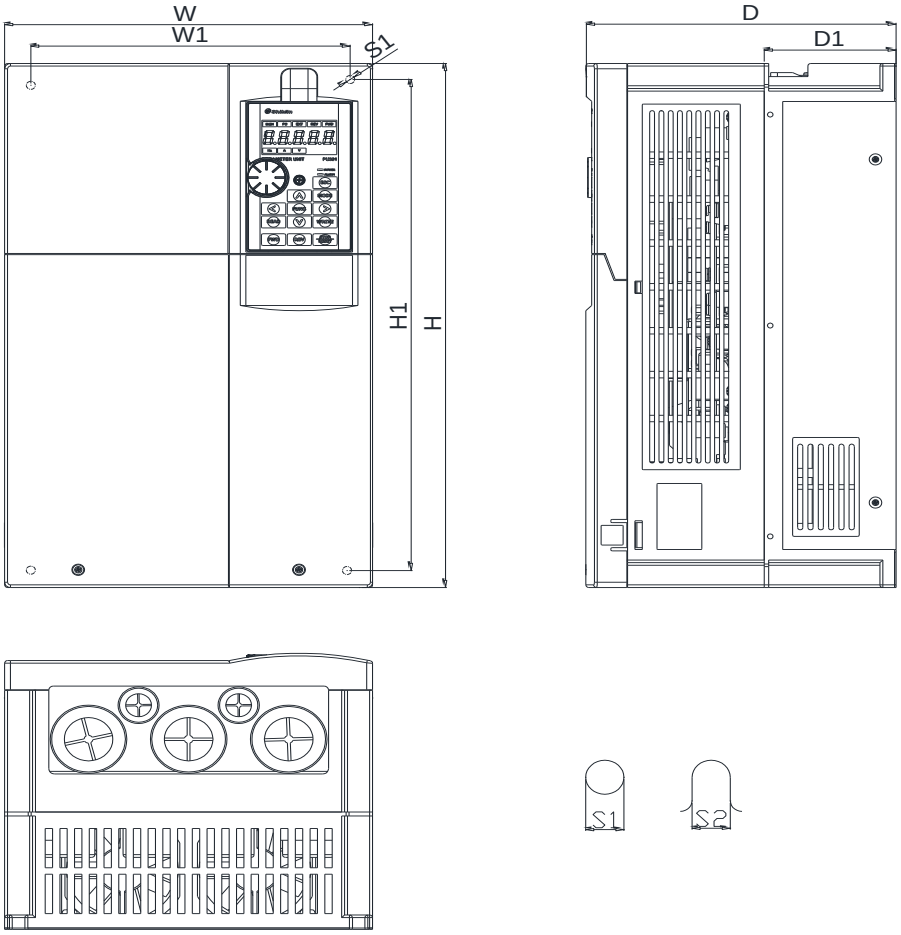

Unit:mm

Model	W	W1	H	H1	D	D1	S1	S2
SF3-043-22K/18.5KG	250.0	231.0	400.0	381.0	210.0	89.5	8.5	8.5
SF3-043-30K/22KG								
SF3-043-37K/30KG								
SF3-043-45K/37KG								

3.3.4 Frame D

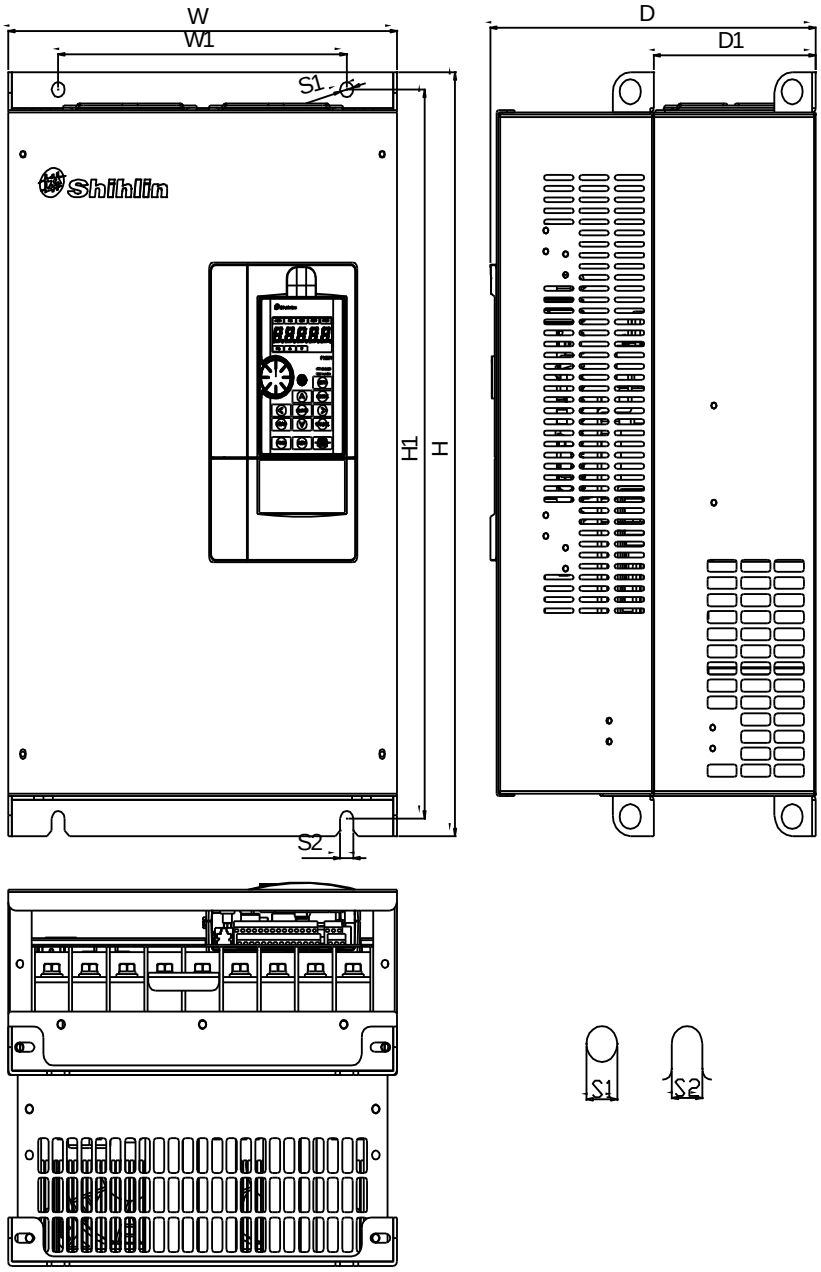

Unit:mm

Model	W	W1	H	H1	D	D1	S1	S2
SF3-043-55K/45KG	330.0	245.0	550.0	525.0	275.0	137.5	11.0	11.0
SF3-043-75K/55KG								
SF3-043-90K/75KG								

3.3.5 Frame E

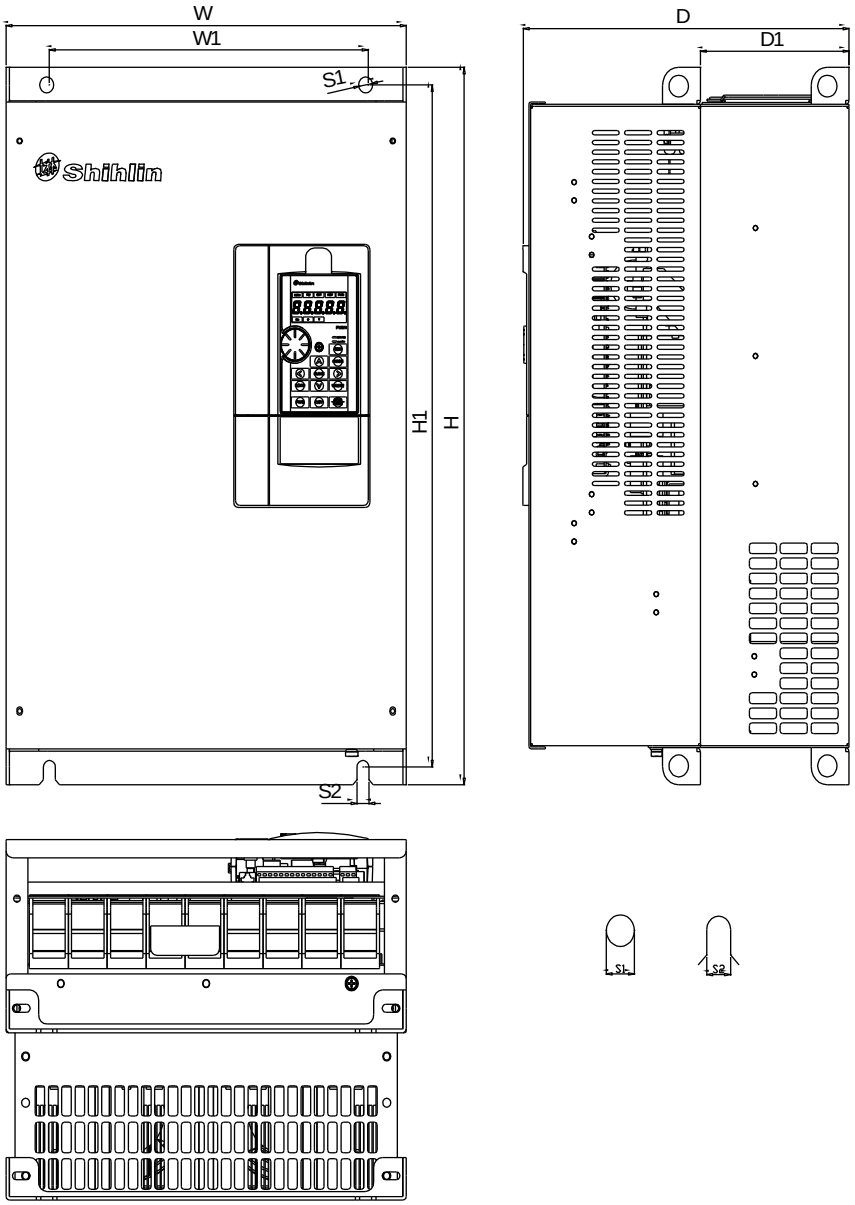

Unit:mm

Model	W	W1	H	H1	D	D1	S1	S2
SF3-043-110K/90KG	370.0	295.0	589.0	560.0	300.0	137.5	11.0	11.0
SF3-043-132K/110KG								

3.3.6 Frame F

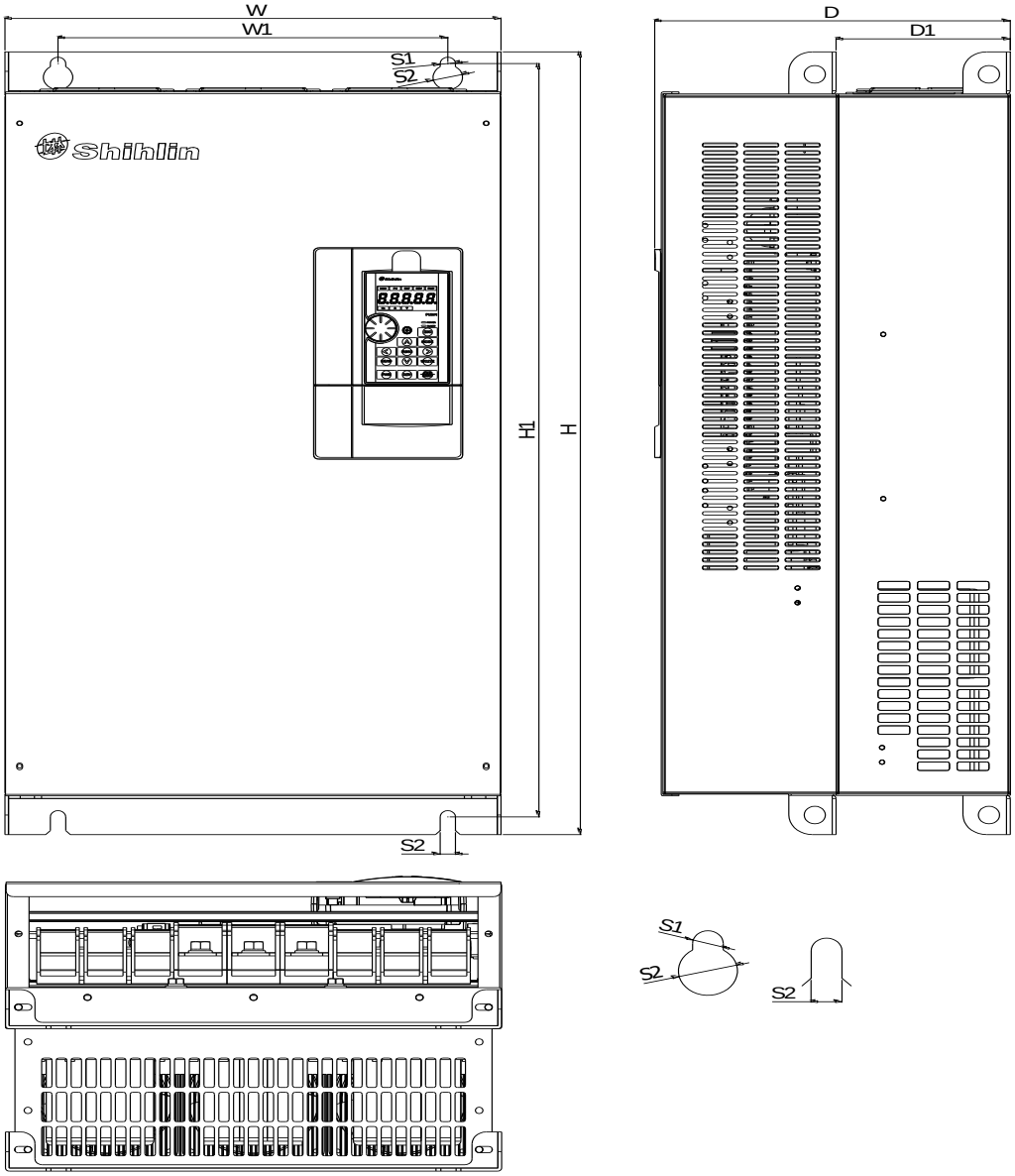

Unit:mm

Model	W	W1	H	H1	D	D1	S1	S2	S3
SF3-043-160K/132KG	420.0	330.0	800.0	770.0	300.0	145.5	13.0	25.0	13.0
SF3-043-185K/160KG									

3.3.7 Frame G

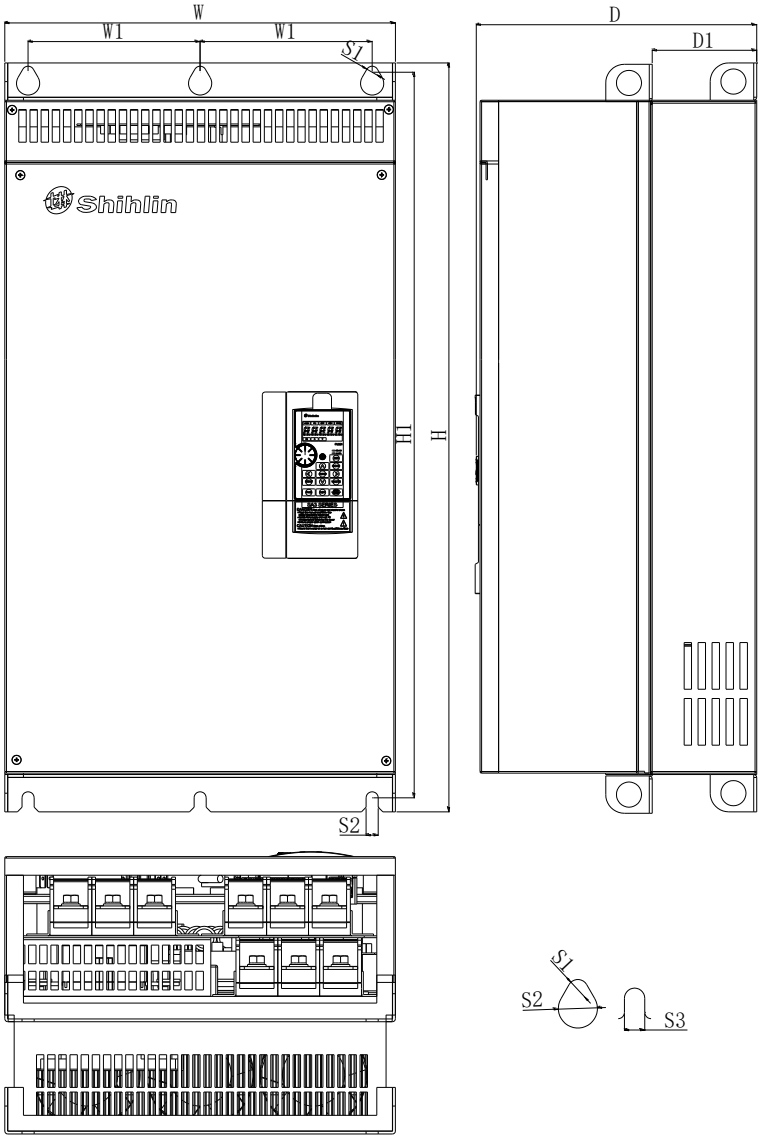

Unit:mm

Model	W	W1	H	H1	D	D1	S1	S2	S3
SF3-043-220K/185KG	500.0	180.0	870.0	850.0	360.0	150.0	13.0	25.0	13.0
SF3-043-250K/220KG									
SF3-043-280K/250KG									

3.3.8 Frame H

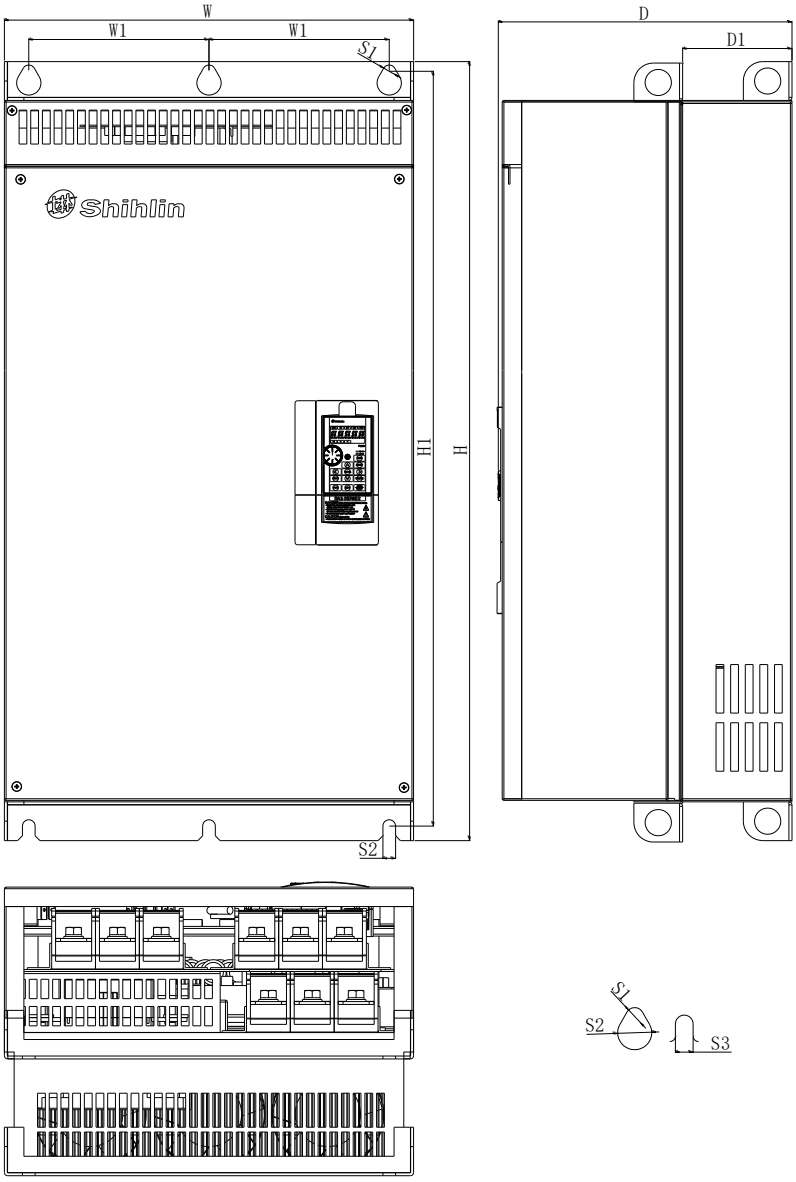

Model	W	W1	H	H1	D	D1	S1	S2	S3
SF3-043-315K/280KG	600.0	230.0	1000.0	980.0	400.0	181.5	13.0	25.0	13.0
SF3-043-355K/315KG									

3.4 Name of each component

3.4.1 Frame A/B/C

SF3-043-5.5K/3.7KG~ SF3-043-45K/37KG

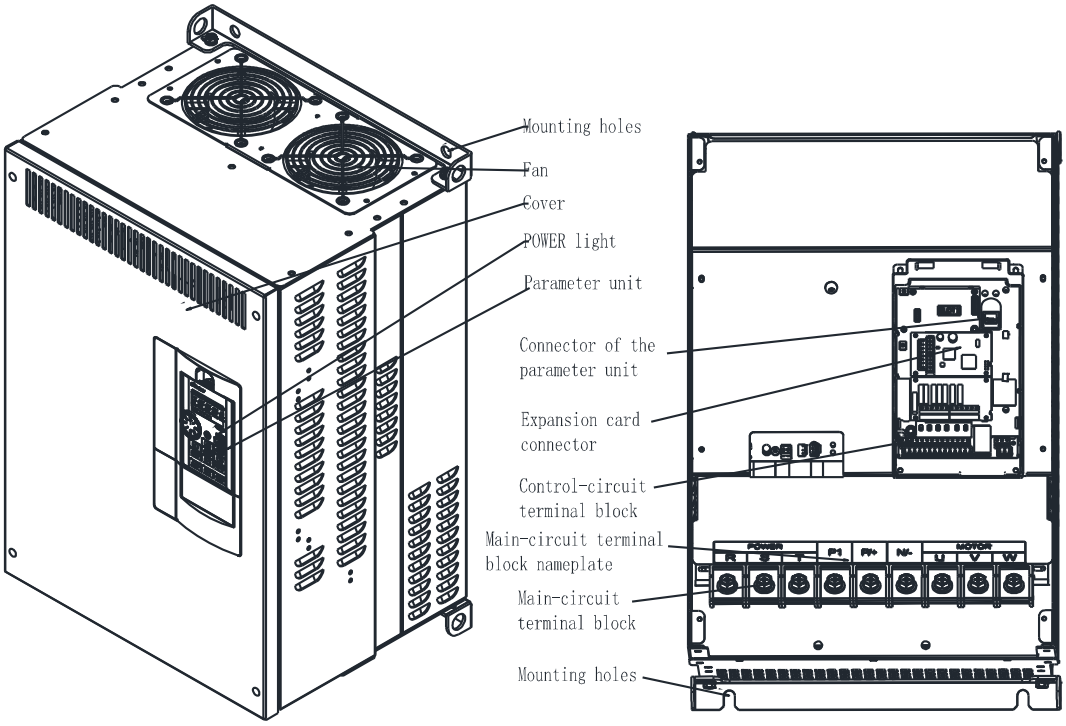

3.4.2 Frame D/E/F

SF3-043-55K/45KG~ SF3-043-185K/160KG

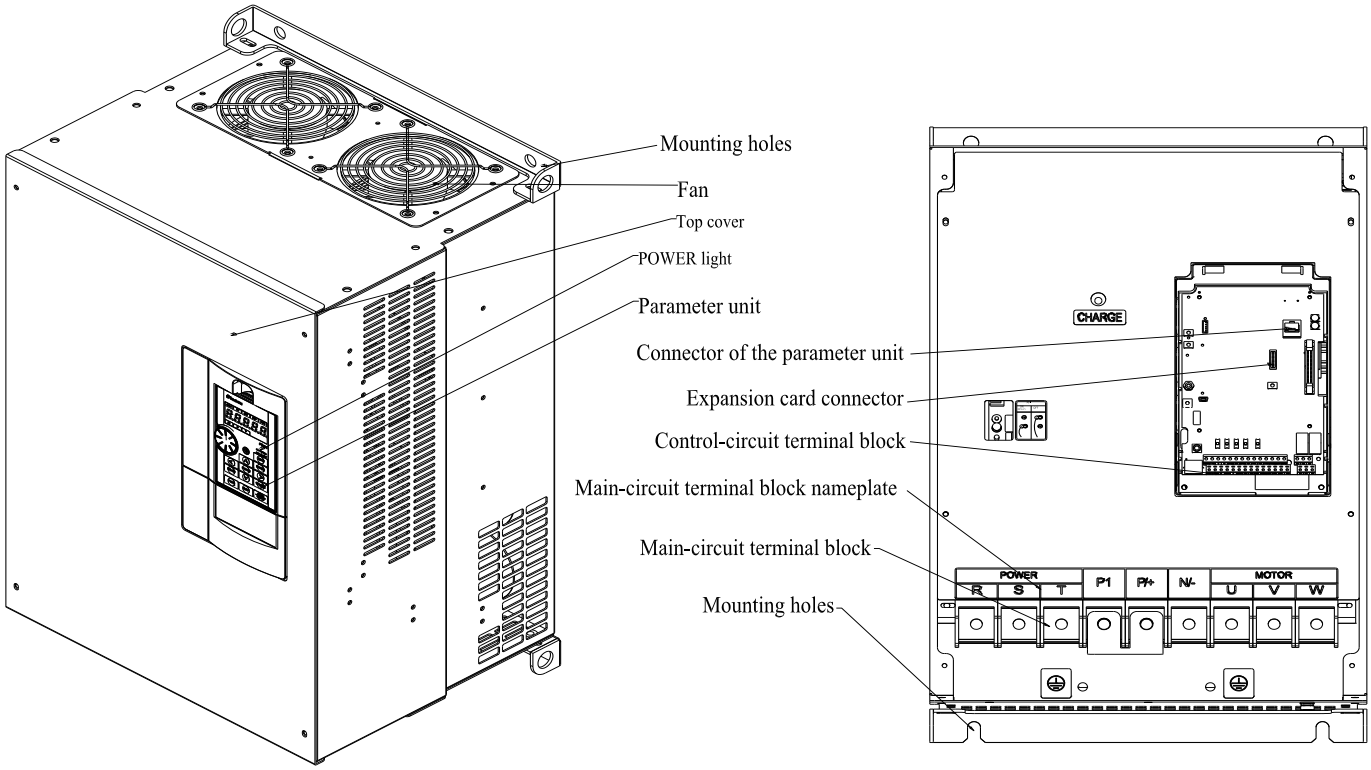

3.4.3 Frame G/H

SF3-043-220K/185KG~ SF3-043-355K/315KG

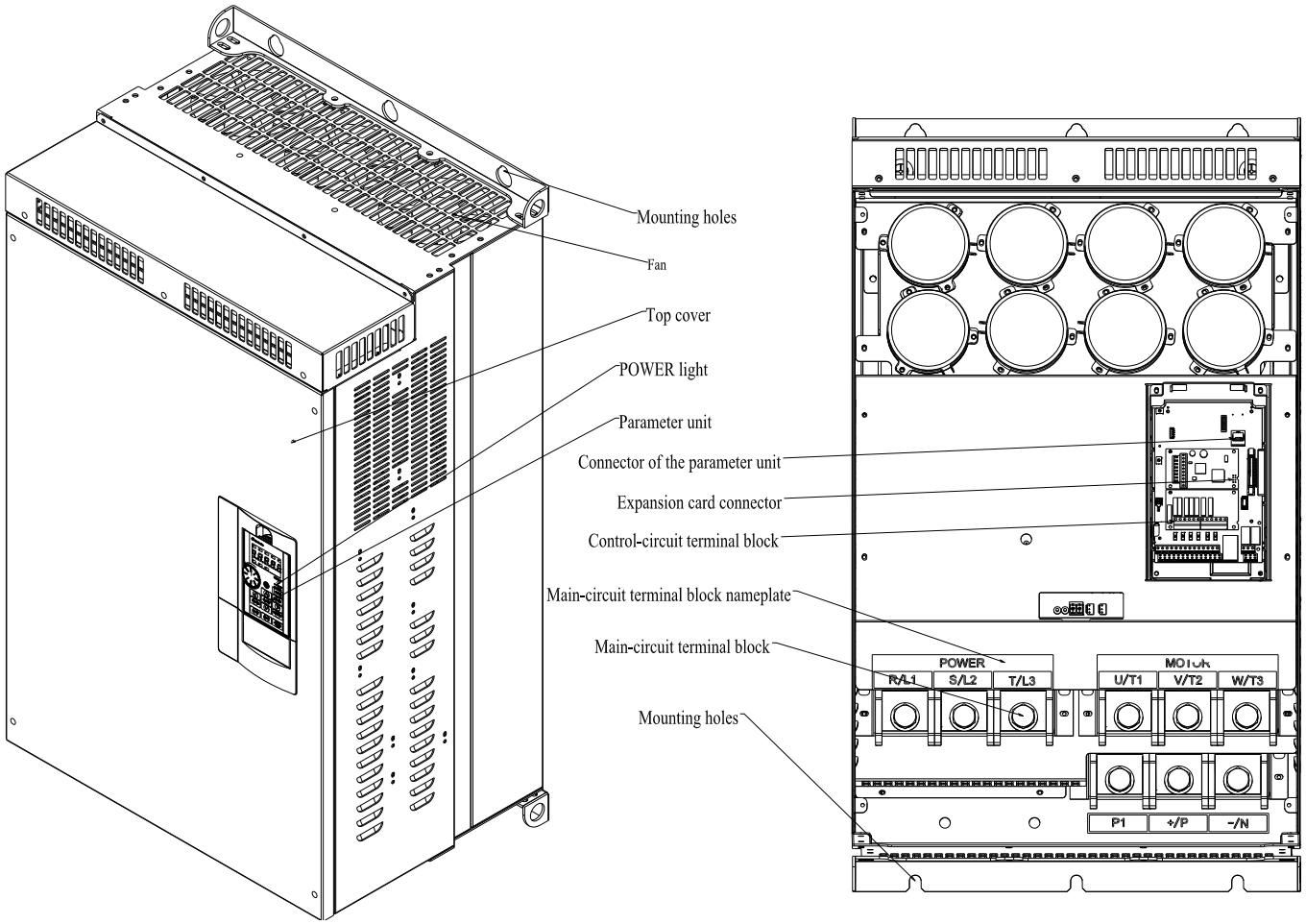

3.4.4 Protection level and operation temperature

Frame	NEMA 1 sticker	Conduit box	Protection class	Operation temperature
A~C	Standard with NEMA 1 sticker	Installation	IP20/NEMA type1	-10 ~ +40℃
	Sticker removed		IP20/NEMA open type	-10 ~ +40℃
D~H	N/A	No installation	IP00/NEMA open type	-10 ~ +40℃
	N/A	Installation	IP20/NEMA type 1	-10 ~ +40℃

3.5 Installation and wiring

3.5.1 Transportation

Hold the body when carrying and don't only hold the cover or any part of the inverter, otherwise it may drop down.

3.5.2 Storage

The product must be placed in the packaging box before installation. In order to make the product conform to the scope of warranty of the company and facilitate maintenance in the future, pay attention to the following matters when storing if the inverter will not be used temporarily:

1.Must be placed in dry places without dirt and dust.

2.The environment temperature for storage place must range from -20℃ to +65℃.

3.The relative humidity for storage place must range from 0% to 95%, and no condensation.

4.Avoid storing in the environment containing corrosion gas or liquid.

5.It's better to be packed properly and kept on shelf or table.

Note:1.Even if the storing place humidity meets the standard requirements, icing and condensation can also occur if the temperature changes rapidly, thus should be avoided.

2.Don't place it on the ground, it should be placed on a shelf. If the environment is bad, put desiccant in the packaging bag.

3.If the storage period is more than 3 months, the storing temperature should not be higher than 30℃. Considering that capacitors will easily degrade in high temperature without being powered on.

4. If the inverter is installed in a machine or control panel when not in use (especially in construction site or humid and dusty places), the inverter should be removed and put in suitable environment according to the above storage conditions.

5.If the inverter isn't power on for a long time, the capacitors will degrade. Do not place it for more than one year without being powered on.

3.5.3 Installation notice

✓ Before installation, please confirm the conditions listed in the table below:

Surrounding temperature	-10 ~ +40℃ (non-freezing) Set "fixed rated current, reduce carrier frequency if temperature increase" or "fixed carrier frequency, reduce rated current if carrier frequency increase".
Surrounding humidity	Below 90%Rh (non-condensing).
Storage temperature	-20 ~ +65℃。
Surrounding environment	Indoor, no corrosive gas, no flammable gas, no flammable powder.
Altitude	Altitude below 2000 meters, but when altitude is above 1,000 m, 2% of rated current needs to be decreased per 1000 rising
Vibration	Below 5.9m/s2 (0.6G).
IP rating	IP20 for frames A, B and C, IP00 for the frame D above (IP20 accessories shall be optional).
Environment pollution degree	2
Protection class	Class I

✓ Please install the inverter verticaly in order not to reduce the heat dissipation effect :

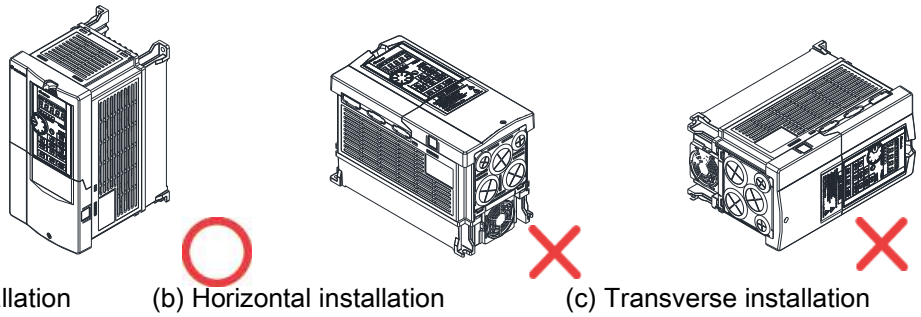

(a) installation (b) Horizontal installation (c) Transverse installation

✓ Please follow the installation restrictions shown below to ensure enough ventilation space for inverter cooling and wiring space:

- Arrangement of single or paralleling inverter:

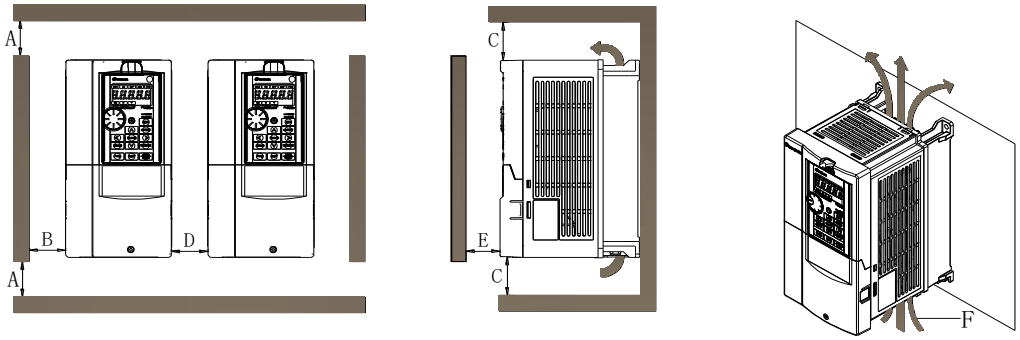

Unit:mm

Dimensions	Frame A	Frame B ~ C	Frame D ~ H
A	50	50	100
B	10	50	100
C	100	100	200
D	10	50	100
E	10	50	50
F	-		

- Installation of multiple inverters:

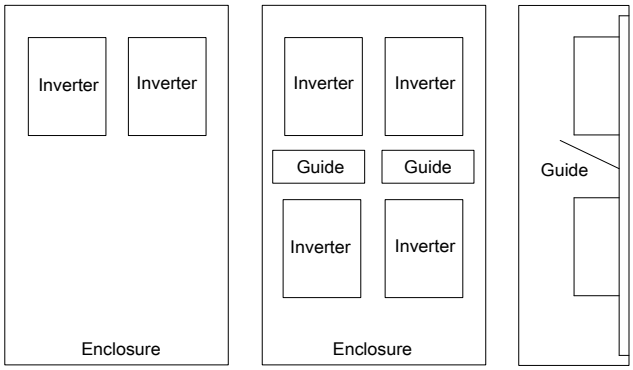

(a) Horizontal (b) vertical

Note: 1. When installing the inverters of different sizes in parallel, please align the top of all inverters before installation, for easier fan replacement..
2.When it is inevitable to arrange inverters vertically to minimize space ,install guides since heat from the bottom inverters can increase the temperature on the top inverters, causing inverter failures.

3.5.4 EMC installation instructions

Just as other electrical and electronic equipment, an inverter is the source of electromagnetic interference and an electromagnetic receiver when working with a power system. The amount of electromagnetic interference and noise is determined by the working principles of an inverter. In order to guarantee the inverter working reliably in the electromagnetic environment, it must have a certain ability of anti-electromagnetic interference in design. In order to make the drive system work normally, please meet the following requirements in different aspects when installing:

- ✓ Field wiring

  Power line supply electricity independently from power transformer, five or four core line are commonly used, do not share a single line with common line and ground.

  Generally signal wire (weak current) and power wire (heavy current) are in control cabinet, for the inverter, power wire is divided into input line and output line. Signal wire can be easily interfered by power wire, causing the device malfunction. When wiring, signal wire and power wire should be wired in different areas, do not parallel or interlaced them at close range(within 20cm), and especially don't bundle up the two. If the signal cables must pass the power lines, the two should keep in 90 degree angle. Do not interlace or band together the input and output power wire, especially if noise filter is installed. It will cause electromagnetic noise coupling while going through input and output power line's capacitance, thus the noise filter will not work.

  Generally a control cabinet contains different electric equipment such as inverters, filters, PLCs, measuring devices, their ability of emitting and bearing electromagnetic noise are diverse from each other, and so it requires classifying them. The classification can be divided into strong noise equipment and noise sensitive equipment, Install the similar equipment in the same area and, and keep a distance more than 20cm among different equipment.

- ✓ Input noise filter, input and output magnet ring (Zero phase reactor)

  By adding noise filter to the input terminal, the inverter will be isolated from the other equipment, and its ability to conduct and radiate will be reduced effectively. By adding ferrite ring to the input and output terminal and coordinating with internal filter, the inverters will perform even better.

- ✓ Shielding

  Good shielding and grounding can greatly reduce the interference of the inverter, and can improve the anti-interference ability of the inverter. Sealing the inverter with conductive metal sheet(case) and connecting the metal sheet to ground, the radiation interference will be reduced effectively. To reduce the interference of inverter and improve the anti-interference ability, cable with shielding layers should be used in input and output line and the both ends of the layer should be connected to ground. Under electromagnetic interfered environment, shielding cable is suggested to be used in control terminal wiring and communication terminal wiring. Generally, the both ends of shielding layer should be connected to the control /communication ground, and they can also be connected to earth ground.

- ✓ Grounding

  The inverter must be connected to the ground safely and reliably. Grounding is not only for equipment and personal safety, but also the simplest, the most efficient and the lowest cost method to solving the EMC problem, so it should be prioritized. Please refer to section3.7" Terminal wiring".

- ✓ Carrier wave

  The leakage current contains the leakage from line to line or line to ground. The amount of it depends on the size of the distributed capacitance when wiring and the carrier frequency of the inverter. The higher the carrier frequency, the longer the motor cable, and the larger the cable cross-sectional area is, the larger the leakage current is. Reducing the carrier frequency can effectively reduce the leakage current. When the motor line is long (50m above), the output side should be installed with ac reactor or sine wave filter, when the motor line is longer, a reactor should be installed every fixed distance. At the same time, reducing carrier frequency can effectively reduce the conduction and radiation interference of the inverter.

3.5.5 Removal of the wiring front cover

✓ Frame A/B

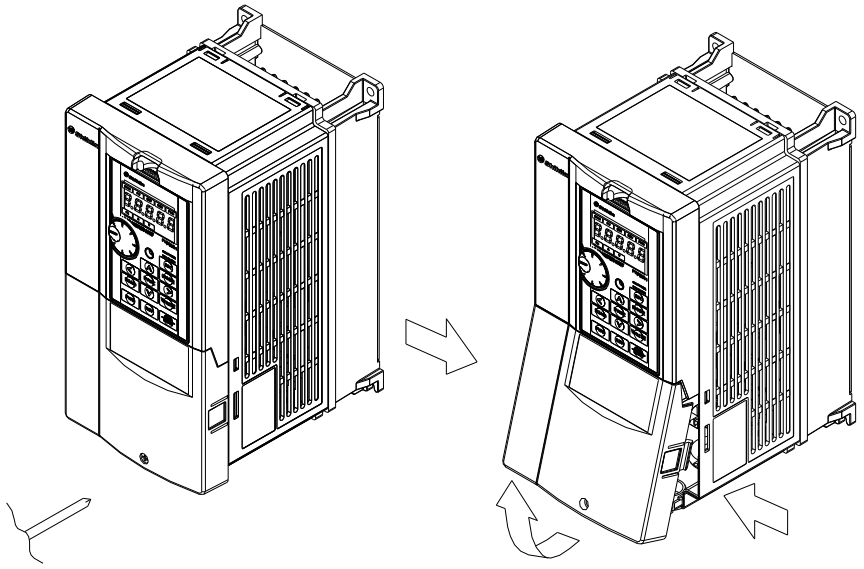

(a) (b)

(a)Loosen the screws on the wiring front cover.

(b)While holding the areas around the installation hooks on the sides of the wiring front cover, pull out the wiring front cover using its upper side as support.

✓ Frame C

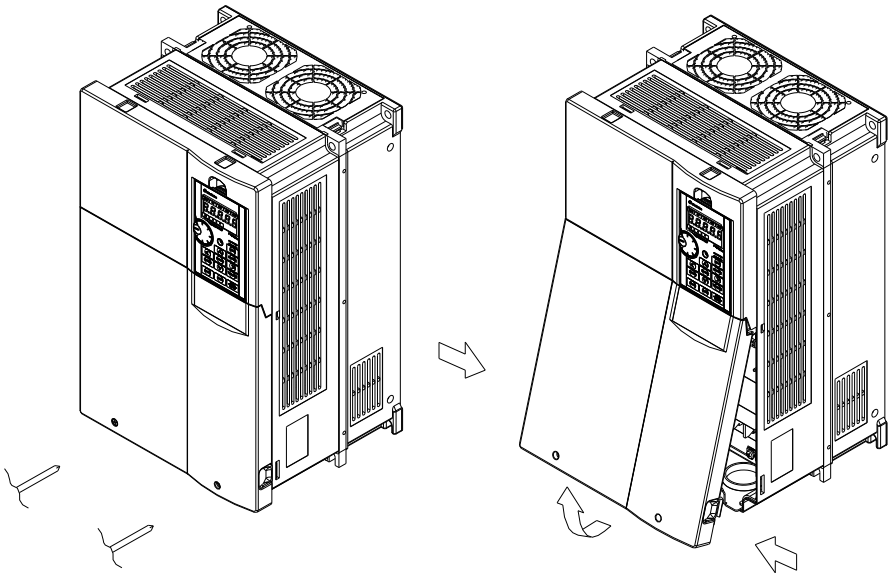

(a) (b)

(a)Loosen the screws on the wiring front cover.

(b)While holding the areas around the installation hooks on the sides of the wiring front cover, pull out the wiring front cover using its upper side as support.

✓ Frame D/E/F

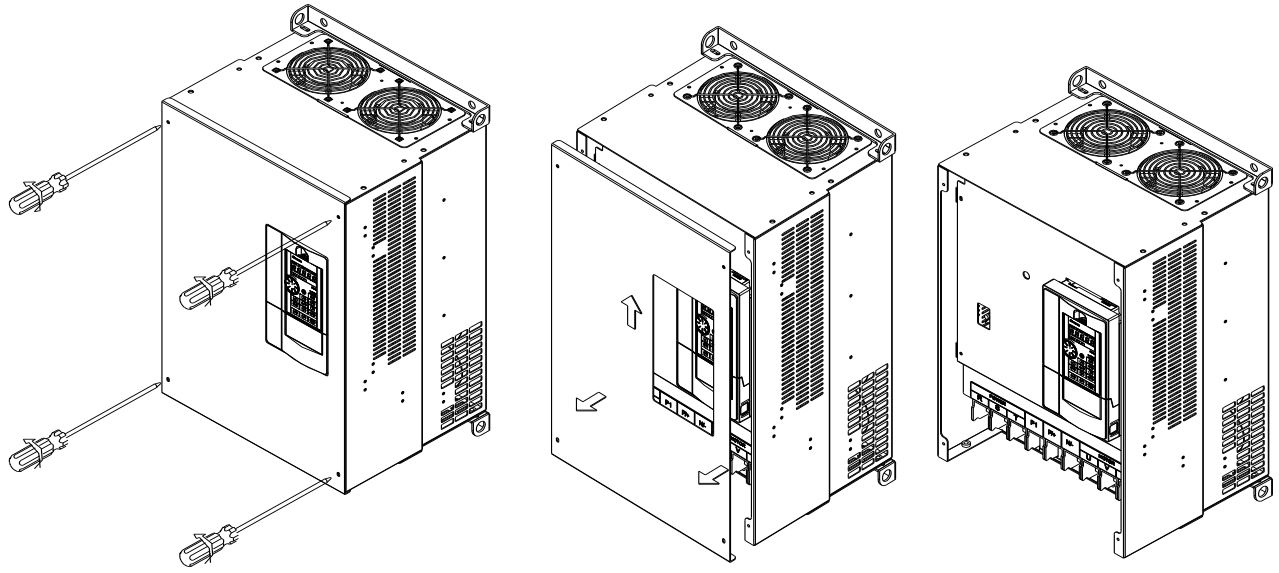

(a) (b) (c)

(a)Loosen the screws on the wiring front cover.

(b)Pull up the front cover and then pull it out.

(c)Removal is finished.

✓ Frame G/H

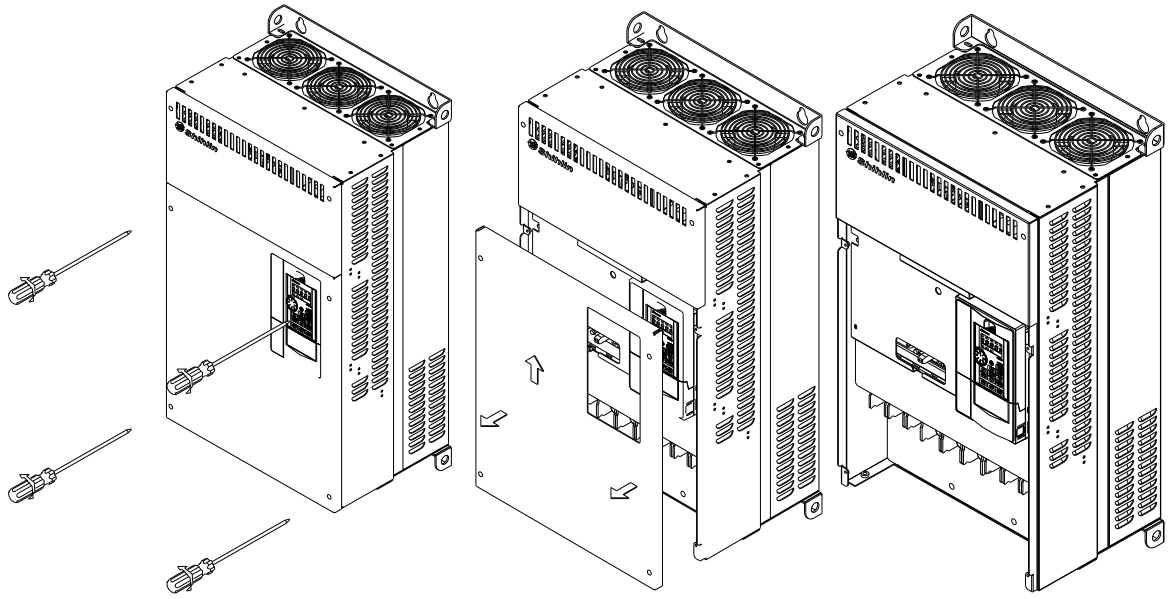

(a) (b) (c)

(a)Loosen the screws on the wiring front cover.

(b)Pull up the front cover and then pull it out.

(c)Removal is finished.

3.6 Peripheral devices

3.6.1 System Wire Arrangement

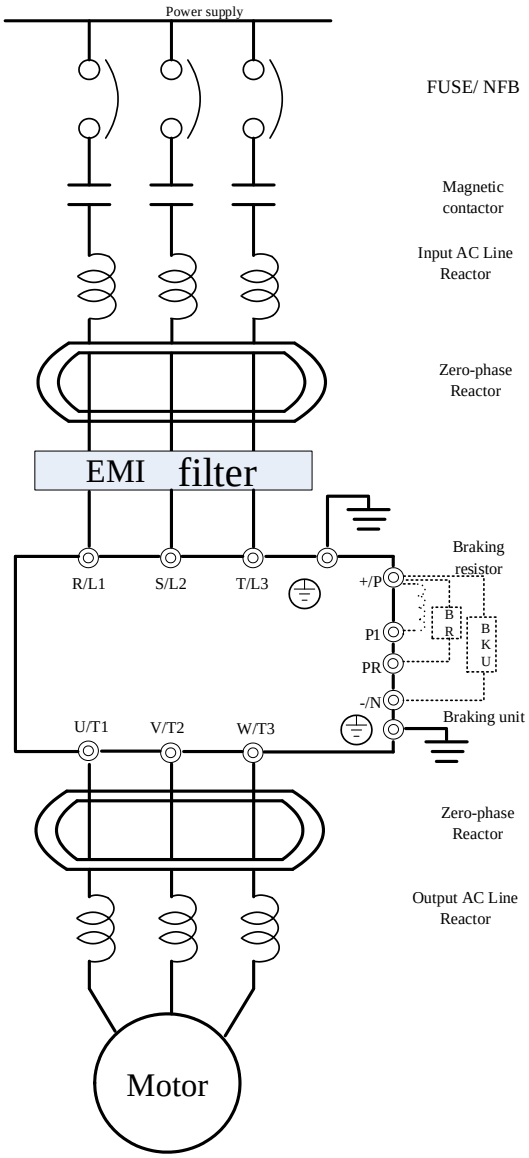

Power supply	Please follow the specific power supply requirement shown in this manual.
FUSE/ NFB	There may be an inrush current during power up.
Magnetic contactor	Please do not use a Magnetic contactor as the I/O switch of the inverter, as it will reduce the operating life cycle of the inverter.
Input AC Line Reactor	AC line reactor should be installed to improve the input power factor. The wiring distance should be less than 10m.
Zero-phase Reactor	Zero-phase reactors are used to reduce radio noise especially when audio equipment installed near the inverter. Effective for noise reduction on both the input and output sides. The frequency band effective range is from 1MHz to 10 MHz.
EMI filter	Used to reduce electromagnetic interference.
Braking unit	Used to reduce stopping time of the motor.
Output AC Line Reactor	Motor surge voltage amplitudes depending on motor cable length. The output AC line reactor is necessary to install on the inverter output side.

3.6.2 No-fuse breaker and magnetic contactor

Inverter model	Motor capacity	Power capacity	Applicable no-fuse switch (NFB/MCCB) type (Shihlin Electric)	Applicable magnetic contactor (MC) type (Shihlin Electric)
SF3-043-5.5K/3.7KG	440V 5HP	10.4kVA	BM30SN3P20A	S-P21
SF3-043-7.5K/5.5KG	440V 7.5HP	11.5 kVA	BM30SN3P30A	S-P21
SF3-043-11K/7.5KG	440V 10HP	16 kVA	BM30SN3P30A	S-P21
SF3-043-15K/11KG	440V 15HP	20 kVA	BM60SN3P50A	S-P30T
SF3-043-18.5K/15KG	440V 20HP	27 kVA	BM60SN3P60A	S-P40T
SF3-043-22K/18.5KG	440V 25HP	32 kVA	BM100SN3P75A	S-P40T
SF3-043-30K/22KG	440V 30HP	41 kVA	BM100SN3P100A	S-P50T
SF3-043-37K/30KG	440V 40HP	52 kVA	BM160SN3P125A	S-P50T
SF3-043-45K/37KG	440V 50HP	65 kVA	BM160SN3P160A	S-P60T
SF3-043-55K/45KG	440V 60HP	79 kVA	BM250SN3P175A	S-P80T
SF3-043-75K/55KG	440V 75HP	100kVA	BM250SN3P175A	S-P80T
SF3-043-90K/75KG	440V 100HP	110kVA	BM250SN3P250A	S-P100T
SF3-043-110K/90KG	440V 120HP	137kVA	BM250SN3P250A	S-P150T
SF3-043-132K/110KG	440V 150HP	165kVA	BM250SN3P250A	S-P200T
SF3-043-160K/132KG	440V 215HP	247kVA	BM400SN3P400A	S-P300T
SF3-043-185K/160KG	440V 250HP	295kVA	BM400SN3P400A	S-P300T
SF3-043-220K/185KG	440V 300HP	367kVA	BM600SN3P500A	S-P400T
SF3-043-250K/220KG	440V 335HP	402kVA	BM600SN3P630A	M-600C
SF3-043-280K/250KG	440V 375HP	438kVA	BM600SN3P630A	M-600C
SF3-043-315K/280KG	440V 420HP	491kVA	BM800SN3P700A	M-600C
SF3-043-355K/315KG	440V 475HP	438kVA	BM800SN3P800A	M-600C

3.6.3 Regenerative Brake Resistor

Voltage	Motor (KW)	Braking Unit			Brake Resistor (10%ED Braking Torque 125%)		Maximum braking torque limit		
		Model	QTY	Model	QTY	Resistor specifications	Minimum resistance value(Ω)	The highest total braking current(A)	Maximum peak power(KW)
043	3.7	--	--			370W 162.2Ω	120	6	4.3
	5.5	--	--			550W 109.1Ω	75	10	6.9
	7.5	--	--			750W 80Ω	75	10	6.9
	11	--	--			1100W 54.6Ω	50	14	10.4
	15	--	--			1500W 40Ω	40	18	13.0
	18.5	--	--			1850W 32.4Ω	32	23	16.2
	22	--	--			2200W 27.3Ω	27.2	26	19.1
	30	--	--			3000W 20Ω	16	45	32.4
	37	--	--		8	9600W 16Ω	12	60	43.2
	45	--	--		8	9600W 13.6Ω	12	60	43.2
	55	BKU-040-45	2	CRHX-B-1500W	8	12000W 10Ω	6	120	86.4
	75	BKU-040-45	2	CRHX-B-1200W	16	19200W 6.8Ω	6	120	86.4
	90	BKU-040-45	2	CRHX-B-1200W	16	19200W 6.8Ω	6	120	86.4
	110	BKU-040-45	3	CRHX-B-1000W	12	12000W 5.8Ω	4	180	129.6
	132	BKU-040-45	3	CRHX-B-1200W	18	21600W 4Ω	4	180	129.6
	160	BKU-040-16	1	CRHX-B-1000W	18	18000W 3.9Ω	3.4	210	151.5
	185	BKU-040-16	2	CRHX-B-1200W	18	21600W 3.4Ω	1.7	420	304.9
	220	BKU-040-16	2	CRHX-B-1500W	16	24000W 2.5Ω	1.7	420	304.9
	250	BKU-040-16	2	CRHX-B-1000W	28	28000W 2.5Ω	1.7	420	304.9
	280	BKU-040-16	2	CRHX-B-1000W	32	32000W 2.2Ω	1.7	420	304.9
	315	BKU-040-16	2	CRHX-B-1000W	36	36000W 1.9Ω	1.7	420	304.9
	355	BKU-040-16	3	CRHX-B-1500W	24	36000W 1.7Ω	1.3	540	399.8

Note: 1.The resistance of brake resistors for built in braking unit is based on 10% regenerative brake duty (when used for 5 seconds, the machine has to be stopped for another 45 seconds for heat dissipation). For models without a built-in brake unit, the resistance of brake resistors is based on the brake duty of the selected brake unit. The regenerative brake resistor wattage can be reduced according to the user's application (quantity of heat) and the regenerative brake duty. But the resistance must be larger than the value (ohms) listed in the above table (otherwise the inverter will be damaged).

2. In case frequent start and stop operations are required, a larger regenerative brake duty should be set. Meanwhile, a large brake resistor should be used correspondingly. Please feel free to contact us if there is any problem regarding the selection of brake resistors.

3. There is no built-in brake unit in frame D, E, F, G and H corresponded inverters. Please select and purchase an external brake unit according to the brake unit section in the manual.

3.6.4 Reactor

✓ AC input reactor

Inverter model	Recommended reactor		
	Shihlin Type	Rated current (A)	Inductance(mH)
SF3-043-5.5K/3.7KG	SH-ACL-0013-01540	13	1.54
SF3-043-7.5K/5.5KG	SH-ACL-0019-01150	19	1.15
SF3-043-11K/7.5KG	SH-ACL-0026-00790	26	0.79
SF3-043-15K/11KG	SH-ACL-0034-00590	34	0.59
SF3-043-18.5K/15KG	SH-ACL-0043-00480	43	0.48
SF3-043-22K/18.5KG	SH-ACL-0048-00400	48	0.4
SF3-043-30K/22KG	SH-ACL-0064-00300	64	0.3
SF3-043-37K/30KG	SH-ACL-0079-00240	79	0.24
SF3-043-45K/37KG	SH-ACL-0096-00200	97	0.2
SF3-043-55K/45KG	SH-ACL-0123-00160	123	0.16
SF3-043-75K/55KG	SH-ACL-0164-00120	164	0.12
SF3-043-90K/75KG	SH-ACL-0180-00100	180	0.1
SF3-043-110K/90KG	SH-ACL-0216-00100	216	0.1
SF3-043-132K/110KG	SH-ACL-0260-00071	260	0.071
SF3-043-160K/132KG	SH-ACL-0310-00071	310	0.071
SF3-043-185K/160KG	SH-ACL-0361-00071	361	0.071
SF3-043-220K/185KG	SH-ACL-0425-00043	425	0.043
SF3-043-250K/220KG	SH-ACL-0480-00043	480	0.043
SF3-043-280K/250KG	SH-ACL-0547-00043	547	0.043
SF3-043-315K/280KG	SH-ACL-0620-00030	620	0.030
SF3-043-355K/315KG	SH-ACL-0683-00030	683	0.030

✓ AC output reactor

Inverter model	Recommended reactor		
	Shihlin Type	Rated current (A)	Inductance(mH)
SF3-043-5.5K/3.7KG	SH-OCL-0015-00470	15	0.465
SF3-043-7.5K/5.5KG	SH-OCL-0020-00350	20	0.350
SF3-043-11K/7.5KG	SH-OCL-0030-00230	30	0.230
SF3-043-15K/11KG	SH-OCL-0040-00180	40	0.180
SF3-043-18.5K/15KG	SH-OCL-0050-00140	50	0.140
SF3-043-22K/18.5KG	SH-OCL-0060-00120	60	0.120
SF3-043-30K/22KG	SH-OCL-0080-00090	80	0.090
SF3-043-37K/30KG	SH-OCL-0090-00078	90	0.078
SF3-043-45K/37KG	SH-OCL-0120-00058	120	0.060
SF3-043-55K/45KG	SH-OCL-0150-00047	150	0.047
SF3-043-75K/55KG	SH-OCL-0200-00035	200	0.035
SF3-043-90K/75KG	SH-OCL-0250-00028	250	0.028
SF3-043-110K/90KG	SH-OCL-0250-00028	250	0.028
SF3-043-132K/110KG	SH-OCL-0290-00024	290	0.024
SF3-043-160K/132KG	SH-OCL-0330-00021	330	0.021
SF3-043-185K/160KG	SH-OCL-0390-00018	390	0.018
SF3-043-220K/185KG	SH-OCL-0490-00014	490	0.014
SF3-043-250K/220KG	SH-OCL-0530-00013	530	0.013
SF3-043-280K/250KG	SH-OCL-0600-00012	600	0.012
SF3-043-315K/280KG	SH-OCL-0660-00011	660	0.011
SF3-043-355K/315KG	SH-OCL-0800-00009	800	0.009

✓ DC reactor

Inverter model	Recommended reactor		
	Shihlin Type	Rated current (A)	Inductance(mH)
SF3-043-5.5K/3.7KG	SH-DCL-0014-03450	14.0	3.45
SF3-043-7.5K/5.5KG	SH-DCL-0020-02380	20.4	2.38
SF3-043-11K/7.5KG	SH-DCL-0027-01770	27.5	1.77
SF3-043-15K/11KG	SH-DCL-0034-01440	33.9	1.44
SF3-043-18.5K/15KG	SH-DCL-0040-01210	40.3	1.21
SF3-043-22K/18.5KG	SH-DCL-0055-00900	55.0	0.90
SF3-043-30K/22KG	SH-DCL-0067-00730	67.5	0.73
SF3-043-37K/30KG	SH-DCL-0082-00600	81.9	0.60
SF3-043-45K/37KG	SH-DCL-0099-00490	98.7	0.49
SF3-043-55K/45KG	SH-DCL-0160-00359	160	0.359
SF3-043-75K/55KG	SH-DCL-0191-00300	191	0.300
SF3-043-90K/75KG	SH-DCL-0233-00246	233	0.246
SF3-043-110K/90KG	SH-DCL-0281-00204	281	0.204
SF3-043-132K/110KG	SH-DCL-0335-00171	335	0.171
SF3-043-160K/132KG	SH-DCL-0389-00148	389	0.148
SF3-043-185K/160KG	SH-DCL-0462-00124	462	0.124
SF3-043-220K/185KG	SH-DCL-0524-00109	524	0.109
SF3-043-250K/220KG	SH-DCL-0585-00098	585	0.098
SF3-043-280K/250KG	SH-DCL-0658-00087	658	0.087
SF3-043-315K/280KG	SH-DCL-0742-00077	754	0.077
SF3-043-355K/315KG	SH-DCL-0836-00069	836	0.069

3.6.5 Filter

Inverter model	kW	HP	Rated Amps of reactor	Types of filter
SF3-043-5.5K/3.7KG	5.5	7.5	12	NF311A20/05
SF3-043-7.5K/5.5KG	7.5	10	17	NF311A20/05
SF3-043-11K/7.5KG	11	15	24	NF311A30/05
SF3-043-15K/11KG	15	20	32	NF311A50/05
SF3-043-18.5K/15KG	18.5	25	38	NF311A50/05
SF3-043-22K/18.5KG	22	30	45	NF311A50/05
SF3-043-30K/22KG	30	40	60	NF311A80/05
SF3-043-37K/30KG	37	50	73	NF311A80/05
SF3-043-45K/37KG	45	60	91	NF311A100/05
SF3-043-55K/45KG	55	75	110	NF311A150/05
SF3-043-75K/55KG	75	100	150	NF311A200/05
SF3-043-90K/75KG	90	120	180	NF311A200/05
SF3-043-110K/90KG	110	150	220	NF311A250/11
SF3-043-132K/110KG	132	175	260	NF311A300/11
SF3-043-160K/132KG	160	215	310	NF311A400/11
SF3-043-185K/160KG	185	250	340	NF311C400/11
SF3-043-220K/185KG	220	300	425	NF312C500/11
SF3-043-250K/220KG	250	335	480	NF312C500/11
SF3-043-280K/250KG	280	375	530	NF312C600/11
SF3-043-315K/280KG	315	420	620	NF312C900/11
SF3-043-355K/315KG	355	475	683	NF312C900/11

Note: Products of CHANGZHOU DUOJI EME TECHNICAL CO. LTD are recommended for the filter used here.

3.7 Terminal wire arrangement

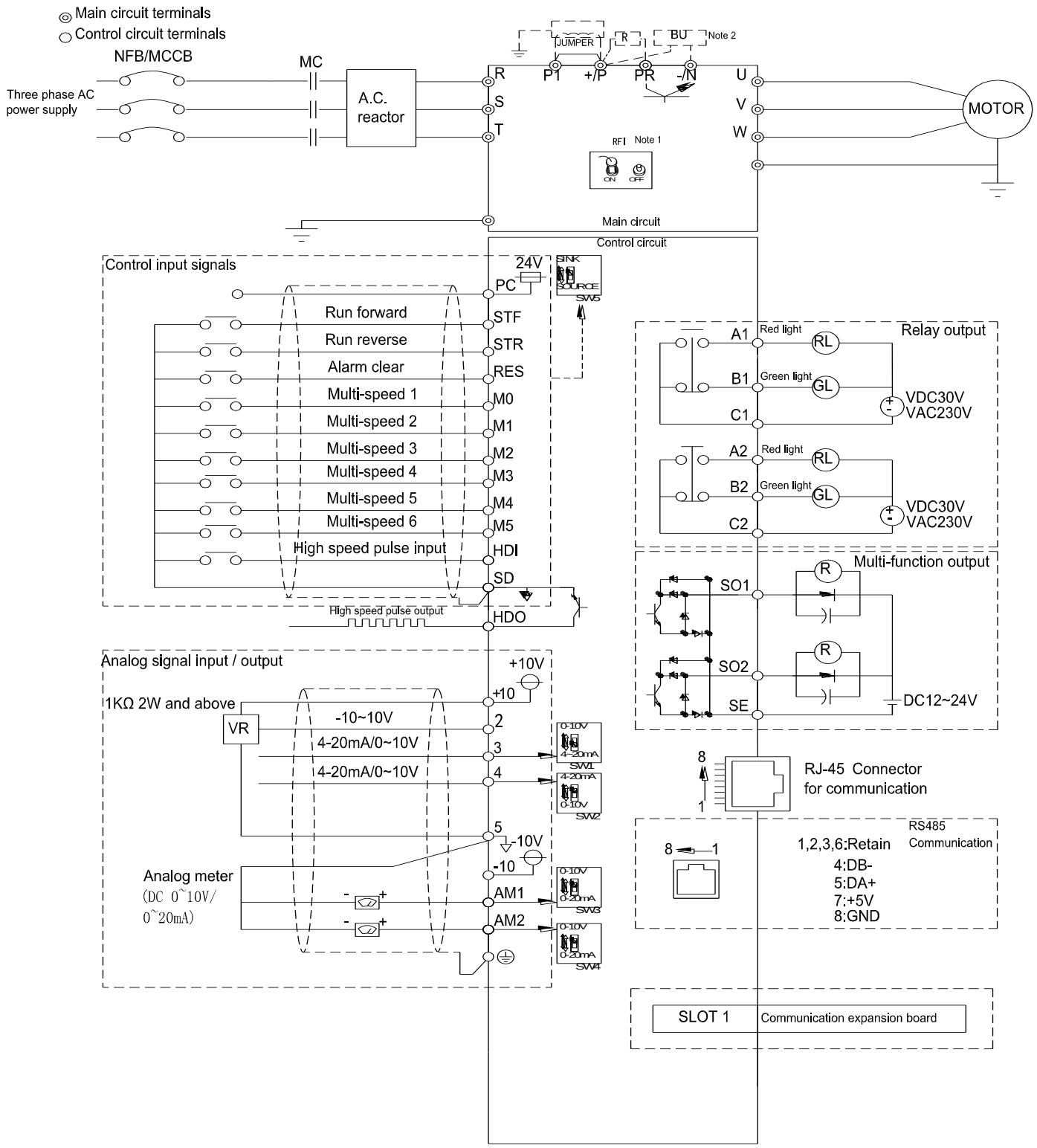

Note: 1. RFI filter Settings, please refer to section 3.7.4.
2. The brake resistor wiring between +/P and PR is for Frame A, B and C only. For connecting the brake unit for frame D, E, F, G and H between +/P and -/N, please refer to the Section 3.7.1 for details.
3. The DC reactor between +/P and P1 is optional. Please short +/P and P1 when AC reactor is not used.
4. When adding DC reactors, please remove the short circuit piece between P1 and +/ .Please refer to section 3.6.4 for the reactor type.
5. Please refer to section 5.3.9 for HDO wiring.

3.7.1 Main Circuit Terminals

✓ Description

Terminal symbol	Description
R/L1-S/L2-T/L3	Connect to power supply
U/T1-V/T2-W/T3	Connect to the motor
P1-(+/P)	Connect to DC reactor
(+/P)-PR	Connect to brake resistor (for frame A, B and C with built-in brake unit)
(+/P)-(-/N)	Connect to brake unit or input DC voltage
⏚	Ground terminal

Note: 1.For SF3 series inverters, brake resistor is not included. For information related to brake resistor, please refer to section 3.6.3 and 3.7.1.

2. For information related to regenerative voltage, please refer to 06-05(P.70) and 06-06(P.70) in section 5.7.3.
3. +/P and -/N are the positive and negative terminals of the internal DC voltage of the inverter. In order to strengthen the braking capacity during deceleration, it is suggested to purchase the optional “brake unit” which is mounted between the terminals +/P and -/N. The “brake unit” can effectively dissipate the feedback energy from the motor to the inverter when decelerating.
4. In case there is any problem on purchasing the “brake unit,” please feel free to contact us.

✓ Terminal layout of the main circuit terminals

- Frame A：SF3-043-5.5K/3.7KG，SF3-043-7.5K/5.5KG

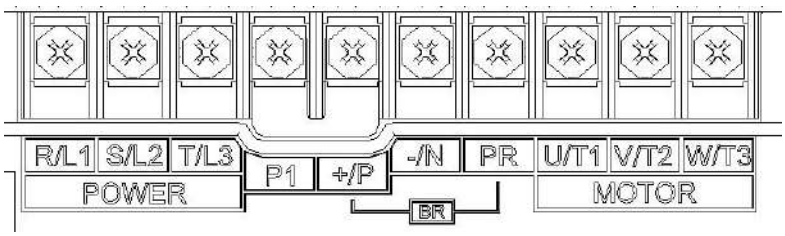

- Frame B/C：SF3-043-11K/7.5KG~SF3-043-45K/37KG

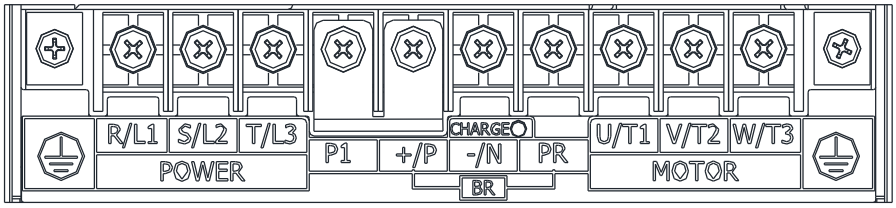

- Frame D/E/F：SF3-043-55K/45KG~SF3-043-185K/160KG

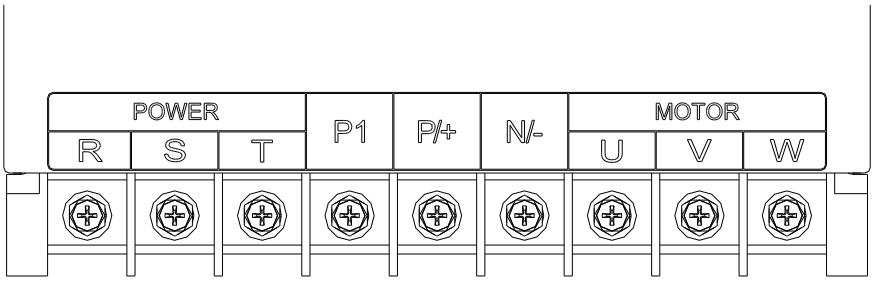

- Frame G：SF3-043-220K/185KG~SF3-043-280K/250KG

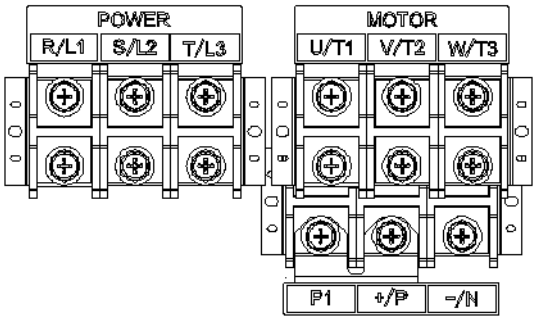

- Frame H：SF3-043-315K/280KG，SF3-043-355K/315KG

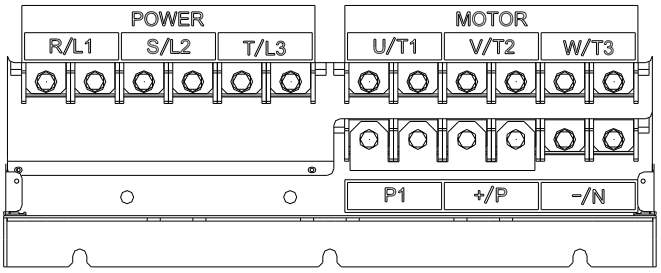

✓ DC reactor connection

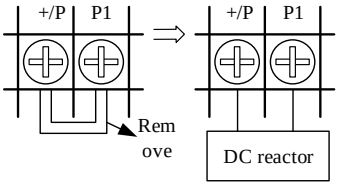

✓ Brake unit connection

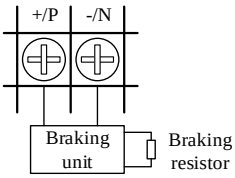

Note: The frequency converter corresponding to frame D, E, F, G and H has no built-in brake unit. BKU brake unit and brake resistance can be selected for details in 7.4.6. For frame A, B and C corresponded inverters with built-in brake unit, they are able to connect to brake resistors directly. Please refer to section 3.3 for instruction on the frames.

✓ Brake unit connection

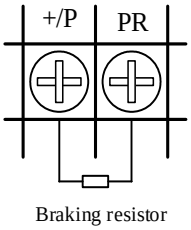

Note:It is only suitable for the inverters corresponding to the frames A, B and C. Please refer to Section 3.3 for instruction on the frames.

3.7.2 Main circuit wiring and terminal specification

Inverter model	Terminal screw specifications	Tightening Torque (Kgf.cm)	Recommended wiring specification (mm2)				Recommended wiring specification (AWG)			
			R、S、T	U、V、W	+/P、P1	Grounding Cable	R、S、T	U、V、W	+/P、P1	Grounding Cable
SF3-043-5.5K/3.7KG	M4	12~15	6	6	6	6	10	10	10	10
SF3-043-7.5K/5.5KG			6	6	6	6	10	10	10	10
SF3-043-11K/7.5KG	M5	20~25	6	6	6	6	10	10	10	10
SF3-043-15K/11KG			10	10	10	10	8	8	8	8
SF3-043-18.5K/15KG			16	16	16	16	6	6	6	6
SF3-043-22K/18.5KG	M6	40~60	25	25	25	16	4	4	4	4
SF3-043-30K/22KG			25	25	25	16	4	4	4	4
SF3-043-37K/30KG			35	35	35	35	2	2	2	4
SF3-043-45K/37KG			70	70	70	35	3/0	3/0	3/0	1/0
SF3-043-55K/45KG	M8	90~110	70	70	70	35	3/0	3/0	3/0	2
SF3-043-75K/55KG			95	95	95	50	4/0	4/0	4/0	1/0
SF3-043-90K/75KG			120	120	120	70	250	250	250	3/0
SF3-043-110K/90KG	M10	180~230	120	120	120	70	250	250	250	3/0
SF3-043-132K/110KG			185	185	185	95	500	500	500	3/0
SF3-043-160K/132KG			95×2P	95×2P	95×2P	95	4/0x2P	4/0x2P	4/0x2P	4/0
SF3-043-185K/160KG			240	240	240	120	4/0x2P	4/0x2P	4/0x2P	4/0
SF3-043-220K/185KG	M12	320~400	120×2P	120×2P	120×2P	120	250x2P	250x2P	250x2P	250
SF3-043-250K/220KG			120×2P	120×2P	120×2P	120	250x2P	250x2P	250x2P	250
SF3-043-280K/250KG			150×2P	150×2P	150×2P	150	300x2P	300x2P	300x2P	300
SF3-043-315K/280KG			150×2P	150×2P	150×2P	150	300x2P	300x2P	300x2P	300
SF3-043-355K/315KG			95×4P	95×4P	95×4P	95×2P	4/0x4P	4/0x4P	4/0x4P	4/0

Note: 1.DO not connect power input wire to motor terminals (U/T1) - (V/T2) - (W/T3)of the inverter, otherwise will cause damage.

2. DO not add phase capacitor, surge absorber or magnetic contactor on the output of the inverter.(As shown on the right)

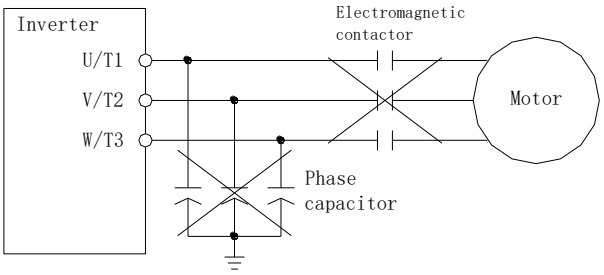

3. Do not use the "magnetic contactor" or "no fuse switch" to start and stop the motor.
4. Please do grounding for the inverter and motor, avoiding electric shock.
5. For specifications of no-fuse switch and magnetic contactor, please refer to section 3.6.2.
6. If the distance between the inverter and motor is long, please use thick wires, make sure wire voltage drop is under 2V (wire length below 500 meters).
7. Use "insulation crimp sleeve " for the connection of the power supply side and load side.
8. After cutting off terminal power, in short period of time, high voltage still exist between (+/P) and (-/N).Within 10 minutes, do not touch terminals, in order to avoid electric shock.

3.7.3 Ground

For safety and to reduce noise, the grounding ⏚ of the inverter must be well grounded. To avoid electric shocks and fire accident, the external metal ground wire of the equipment should be short and thick, and should be connected to specific grounding terminals on the inverter. If several inverters are placed together, all inverters must be connected to the common ground. Please refer to the following diagrams and ensure that no loop is formed between grounding terminals.

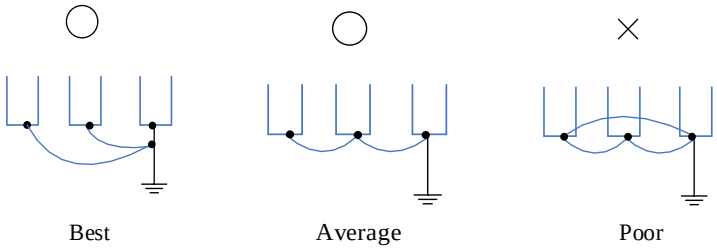

3.7.4 RFI filter

The SF3 series inverters are equipped with built-in RFI filters. These filters are effective in reducing electromagnetic interference, but to meet CE standard, please refer to section 3.5.4 for installation and wiring.

✓ Frame A/B/C

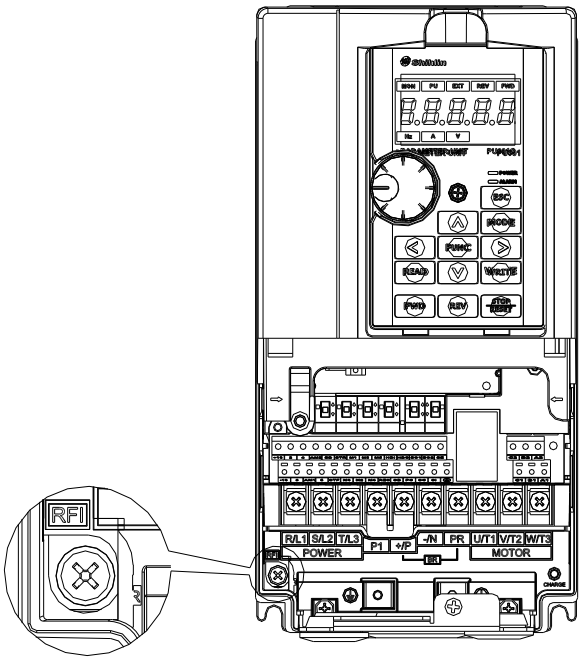

Frame A

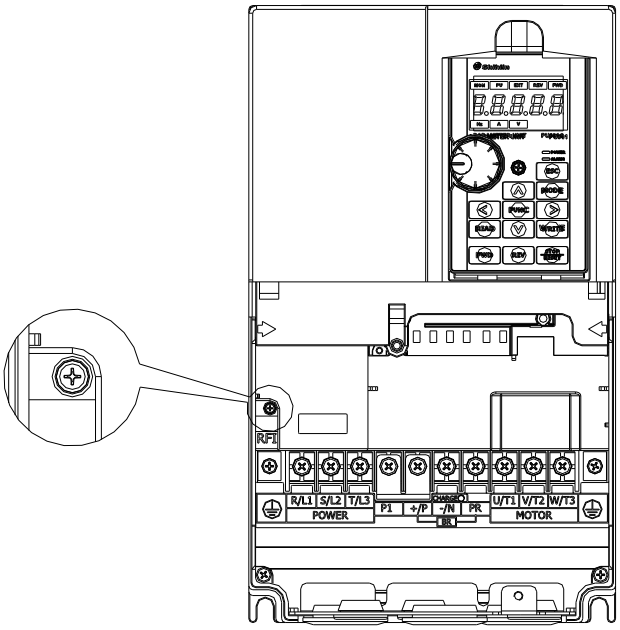

Frame B

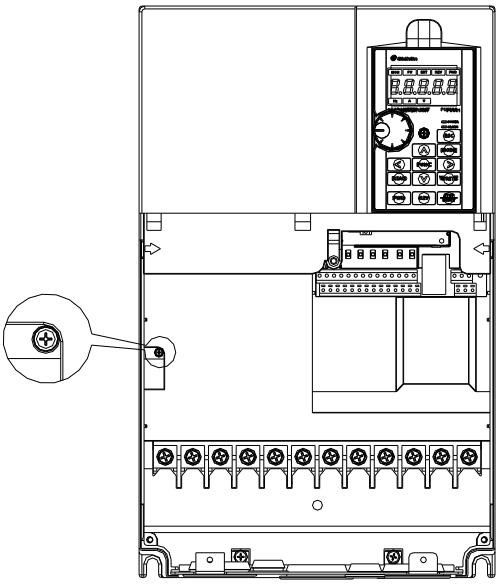

Frame C

RFI filter ON: screws is fastened (default status)

RFI filter OFF: screws is loosened

✓ Frame D/E/F/G/H

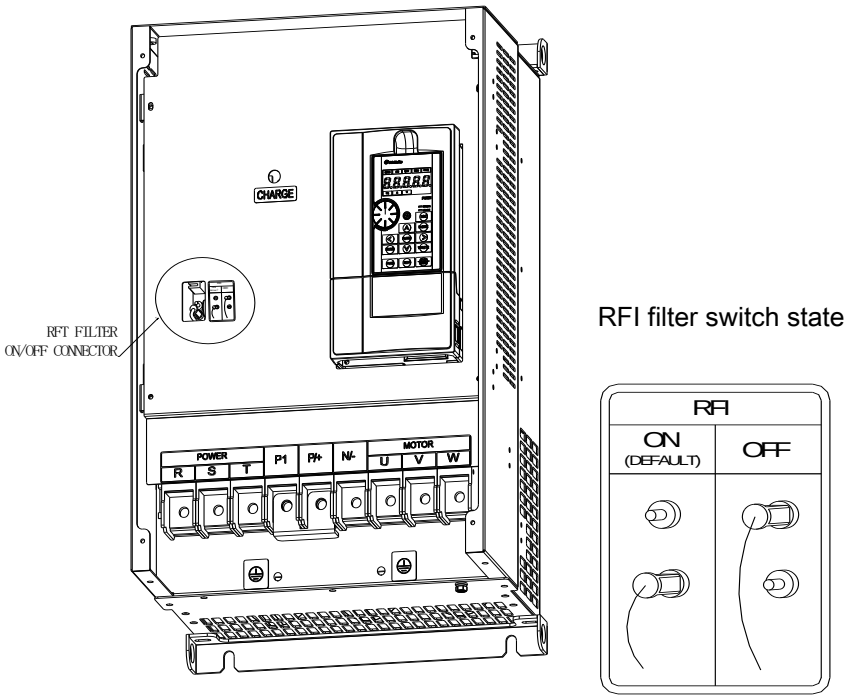

Note: 1. When the main power supply is switched on, DO NOT switch the status of the RFI filter. Confirm that the main power supply has been switched off before switching status of the RFI filter.

2. Electrical conductivity of the capacitor will be cut off by switching off the RFI filter. Moreover, the electromagnetic capacitance of the inverter will be reduced by switching off the RFI filter.

3. When one grounded power system is taken as the main power supply, DO NOT switch on the RFI filter. To prevent machine from damage, the RFI filter shall be cut off if the inverter is installed on an ungrounded power system, a high resistance-grounded (over 30 ohms) power system, or a corner grounded TN system.

4. DO NOT cut off the RFI filter during the high-voltage test.

5. When the RFI filter is ON, it can effectively suppress electromagnetic interference, but it also increases leakage current.

3.7.5 Control circuit

✓ Control terminal name

Terminal type	Terminal Name	Function instructions	Terminal specifications
Switch Signal input	STF	There are totally 10 multi-function control terminals, which can be switched between SINK/SOURCE mode	Input impedance: 4.7kΩ Action current: 5mA(24VDC) Voltage range: 10~28VDC Maximum frequency: 1kHz
	STR		
	RES		
	M0		
	M1		
	M2		
	M3		
	M4		
	M5		
	HDI		Maximum frequency:100kHz
Analog signal input	10	+10.5±0.5V	Maximum current:10mA
	-10	-10.5±0.5V	Maximum current:10mA
	2	-10~10V/0~10V	Input impedance:10kΩ
	3	0~20mA/0~10V 0~10V voltage input terminal can also input PT100 (with AM2)	When the current is input, the input impedance is 235Ω When the voltage is input, the input impedance is 24kΩ
	4		
Relay output	A1	Multi-function relay output terminals. A-C is normal open contact, B-C is normal closed contact, C is common terminal.	Maximum voltage: 30VDC or 250VAC Maximum current: Resistor load 5A NO/3A NC Inductance load 2A NO/1.2A NC (cosΦ=0.4)
	B1		
	C1		
	A2		
	B2		
	C2		
Open collector output	SO1	Multi-function open collector output terminal	Maximum voltage: 48VDC Maximum current:50mA
	SO2		
Analog signal output	AM1	0~10V/0~20mA	Output voltage: 0~10VDC Maximum current: 3mA; Output current: 0~20mA Maximum load: 500Ω
	AM2		
Pulse output	HDO	Multi-function pulse output terminal, FM and 10X are compatible.	Minimum load:4.7kΩ Maximum current:50mA Maximum voltage: 48VDC Maximum frequency:100kHz
Communication terminal	DA+、DB-	RS-485	Highest rate: 115200bps Maximum distance: 500m
	RJ45		
Common terminal	SD	The COM terminal of STF, STR, RES, M0, M1, M2, M3, M4, M5, HDI, HDO (SINK).	---
	SE	The COM terminal of SO1, SO2 collector output terminal.	---
	5	The COM terminal of 10, -10, 2, 3, 4, AM1, AM2, DA+, DB-	---
	PC	The COM terminal of STF, STR, RES, M0, M1, M2, M3, M4, M5, HDI, HDO(SOURCE).	Output voltage: 24VDC±20% Maximum current:200mA

✓ Control logic (SINK/SOURCE) switch

The multi-function digital input terminal of SF3 series inverter can be switched between sink and source by the toggle switch SW5. The diagram is as follows:

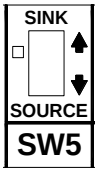

No matter which mode the multi-function digital input terminal is in, all of them can be considered as a simple switch. If the switch is “「on」," the control signal will be put into the terminal. If the switch is “「off」,” the control signal is shut off.

If "Sink Input” mode is selected, the function of the terminal is active when it is shorted with SD or connected to an external PLC. In this mode, the current flows out of the corresponding terminal when it is “on". Terminal “SD” is common to the contact input signals. When the output transistor is powered by the external power supply, please use terminal as a common to prevent misoperation caused by leakage current.

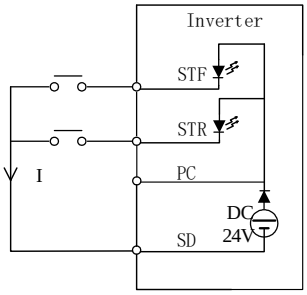

Sink Input: the multi-function control terminal is shorted directly with SD

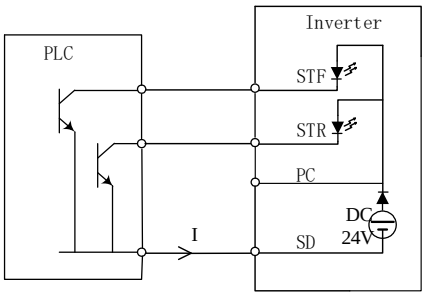

Sink Input: the multi-function control terminal is connected directly with open-collector PLC

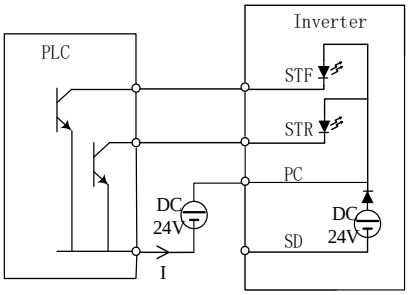

Sink Input: the multi-function control terminal is connected with open-collector PLC and external power supply

If "Source Input” mode is selected, the function of the terminal is active when it is shorted with PC or connected to an external PLC. In this mode, the current flows into the corresponding terminal when it is “on". Terminal PC is common to the contact input signals. When the output transistor is powered by the external power supply, please use terminal SD as a common to prevent misoperation caused by leakage current.

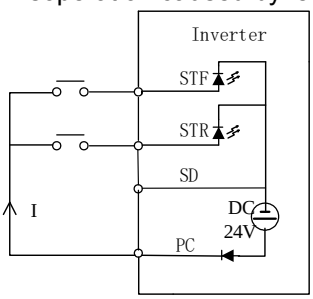

Source Input: the multi-function control terminal is shorted directly with PC

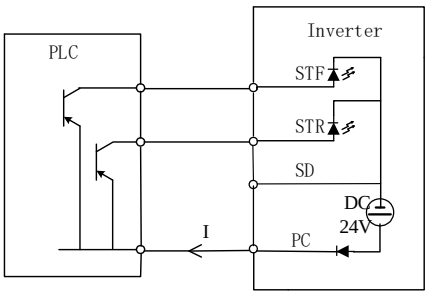

Source Input: the multi-function control terminal is connected directly with open-emitter PLC

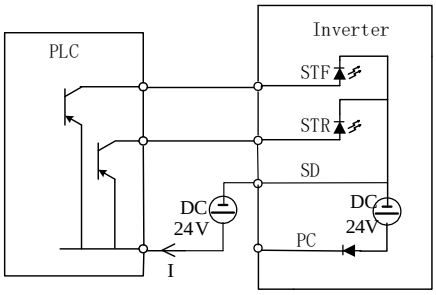

Source Input: the multi-function control terminal is connected with open-emitter PLC and external power supply

✓ Arrangement of control terminal

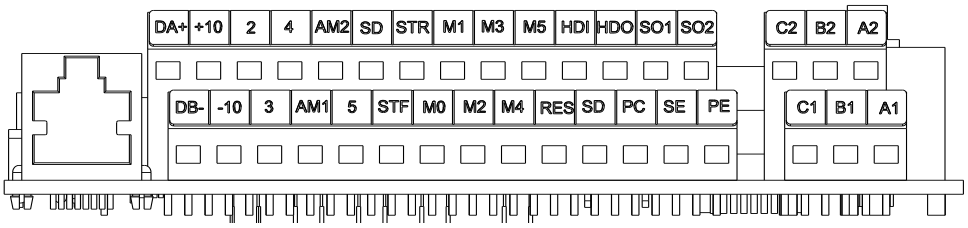

- Wires connection

For the control circuit wiring, strip off the sheath of a cable, and use it with a blade terminal. For a single wire, strip off the sheath of the wire and apply directly.
Plug the blade terminal or a single wire into the wiring port for wiring.

(1) Strip off the sheath for the below length. If the length of the sheath peeled is too long, a short circuit may occur with neighboring wires. If the length is too short, wires might come off.
Wire the stripped cable after twisting it to prevent it from becoming loose. In addition, do not solder it.

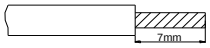

Crimp the blade terminal.
Insert wires to a blade terminal and check that the wires come out for about 0 to 0.5 mm from a sleeve.
Check the condition of the blade terminal after crimping. Do not use a blade terminal of which the crimping is inappropriate, or the face is damaged.

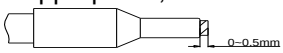

- Please do use blade terminals with insulation sleeve. Blade terminals commercially available:

Cable gauge (mm²)	Blade terminals model	L (mm)	d1 (mm)	d2 (mm)	Manufacturer	Crimping tool product number
0.3	AI 0,25-6 WH	10.5	0.8	2	Phoenix Contact Co., Ltd.	CRIMPFOX 6
0.5	AI 0,5-6 WH	12	1.1	2.5		
0.75	AI 0,75-6 GY	12	1.3	2.8		
0.75 (for two wires)	AI-TWIN 2×0,75-6 GY	12	1.3	2.8		

Note:1.Please use a small flathead screwdriver (tip thickness: 0.6mm, width: 3.0mm). If a flathead screwdriver with a narrow tip is used, terminal block maybe damaged.
2. Tightening torque is 2.12~3.18 kgf.cm, too large tightening torque can cause screw slippage, too little tightening torque can cause a short circuit or malfunction.

✓ Toggle switch

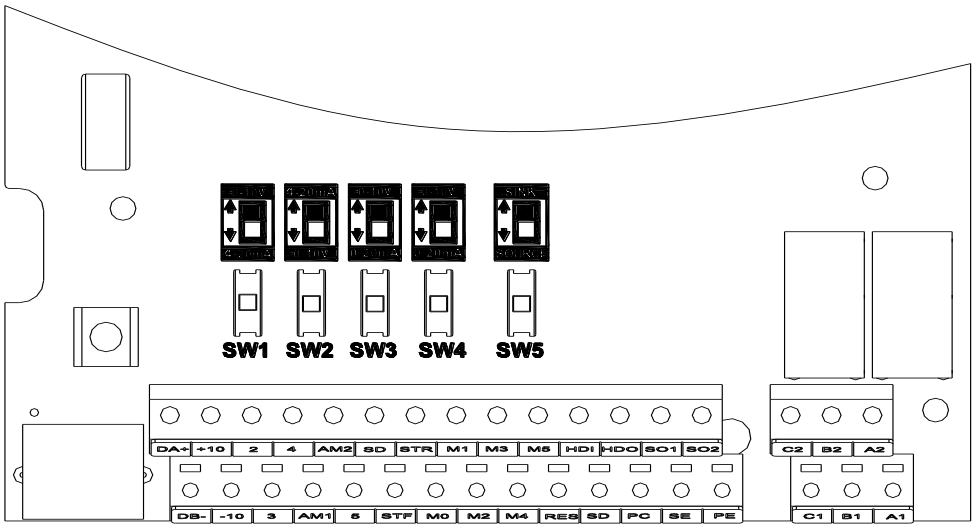

Switch number	Switch state	Explanation	Remarks
SW1	*	Input 0~10V voltage signal into terminal 3-5	Cooperating with 02-29(P.531), please refer to section 5.3.7.
		Input 4~20mA current signal into terminal 3-5	
SW2	*	Input 4~20mA current signal into terminal 4-5	Cooperating with 02-20(P.17), please refer to section 5.3.6.
		Input 0~10V voltage signal into terminal 4-5	
SW3	*	Output 0~10V voltage from terminal AM1	Cooperating with 02-45(P.64), please refer to section 5.3.11.
		Output 0~20mA/4~20mA current from terminal AM1	
SW4	*	Output 0~10V voltage from terminal AM2	Cooperating with 02-48(P.538), please refer to section 5.3.12.
		Output 0~20mA/4~20mA current from terminal AM2	
SW5	*	Select the method of Sink Input	please refer to section 3.7.5 Control logic change
		Select the method of Source Input	

Note: 1. Sates with "*" is the default state of the switch.
2. The parts in black stand for switch handle.

3.8 Flange Installation Description

3.8.1 Frame A

Frame A：SF3-043-5.5K/3.7KG，SF3-043-7.5K/5.5KG

✓ Model name: FMK301 order code: SNKFMK301

✓ Cutout dimension

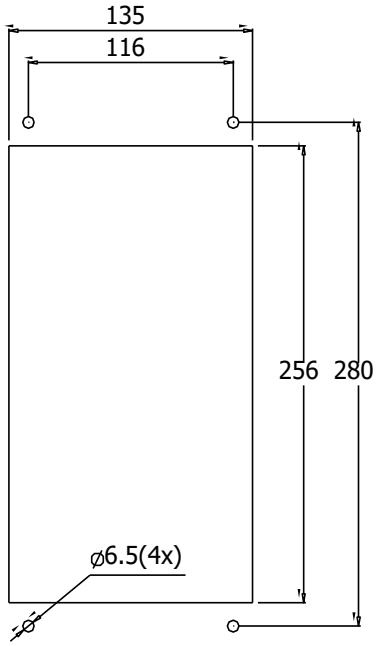

1. Install accessory 1 by fastening screw 1*4(M3*8) (as the following figure shows). 『Screw torque:20~25kg-cm』

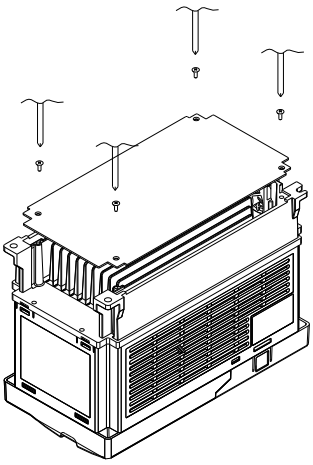

2. Install accessories 3&4 by fastening screw3*4 (M4*8) (as the following figure shows). 『Screw torque:20~25kg-cm』

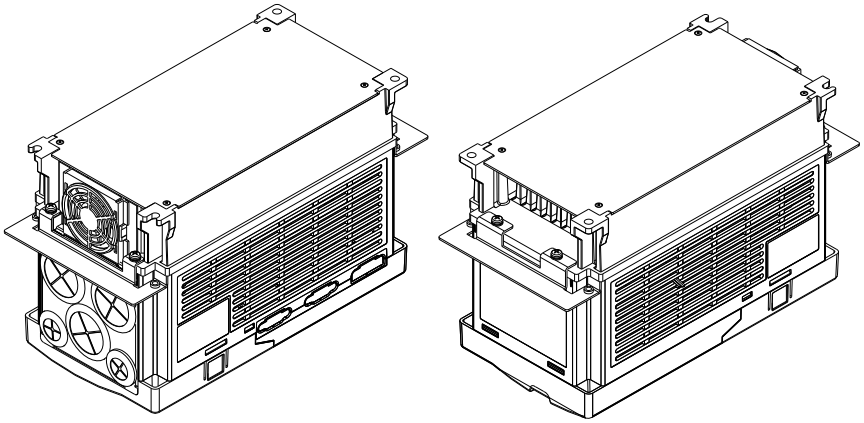

3. Install accessories 2&3&4 by fastening screw 3*4 (M4*8) (as the following figure shows). 『Screw torque:20~25kg-cm』

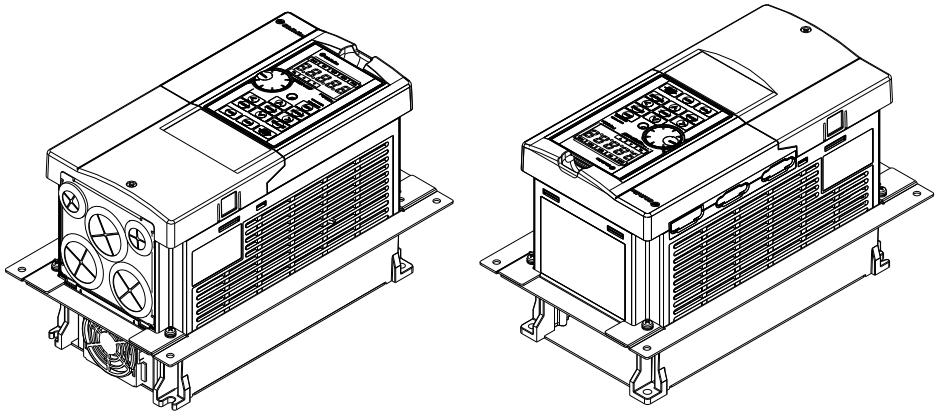

4. Plate installation, place screw 2*4 (M6*15) through accessories 2&3&4 and the plate then fasten the screws (as the following figure shows). 『Screw torque: 65~75K/ 90KFg-cm』

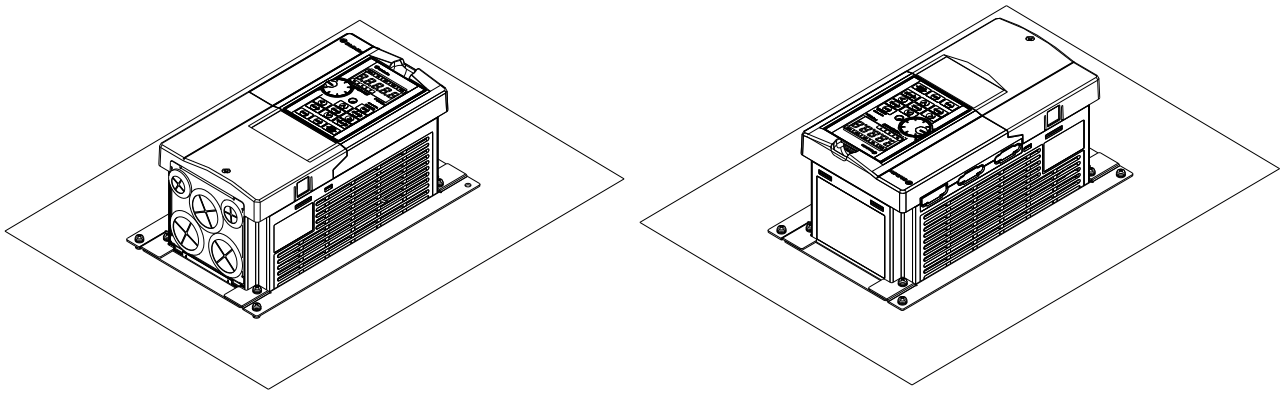

3.8.2 Frame B

Frame B：SF3-043-11K/7.5KG~ SF3-043-18.5K/15KG

✓ Model name: FMK302 order code: SNKFMK302

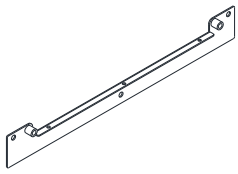

Accessories 1*2

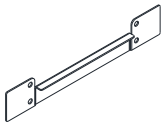

Accessories 2*2

Screw 1*10-M6*15

Screw 2*6-M4*10

✓ Cutout dimension

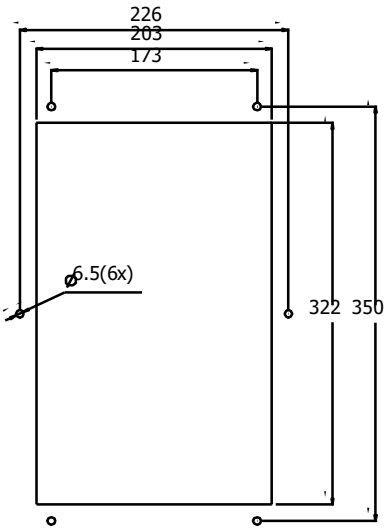

1. Place screw2*6 (M4) through accessory 1 and the inverter then fasten the screws (as the following figure shows). 『Screw torque:8~10kg-cm』

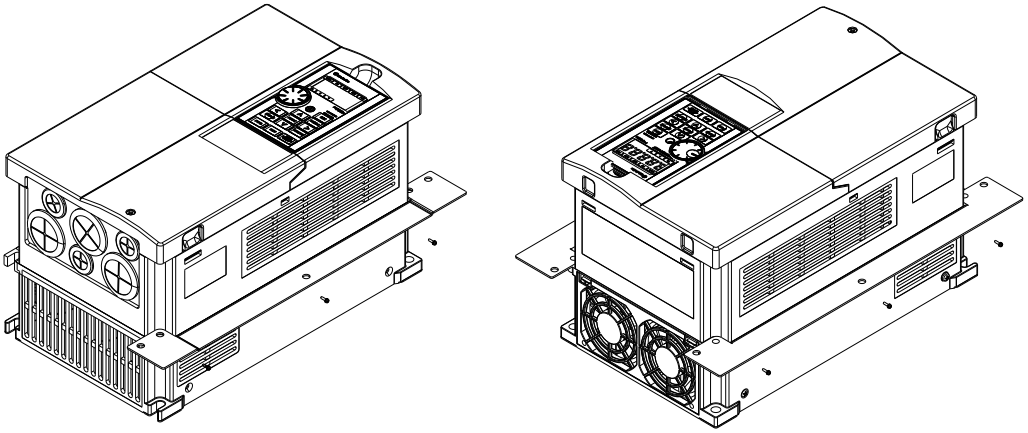

2. Install accessories 1&2 by fastening screw 1*4 (M6) (as the following figure shows). 『Screw torque: 65~75K/90KFg-cm』

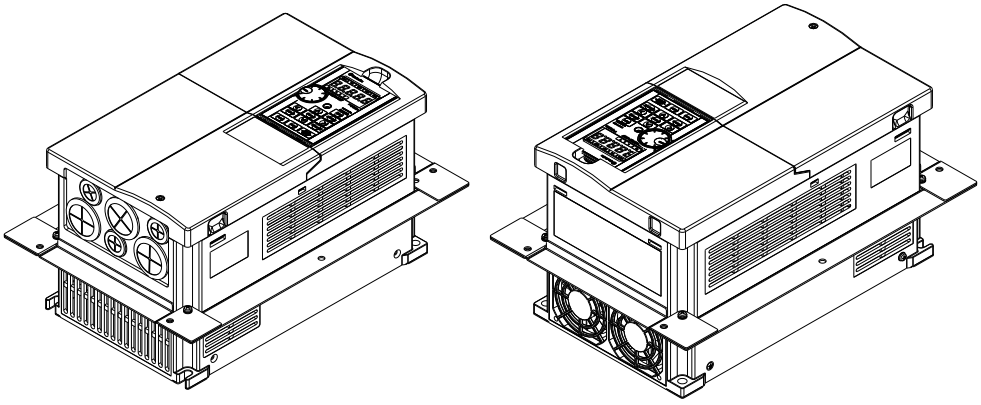

3. Place screw 6*1 (M6) through accessories 1&2 and the plate then fasten the screws (as the following figure shows). 『Screw torque: 65~75K/90KFg-cm』

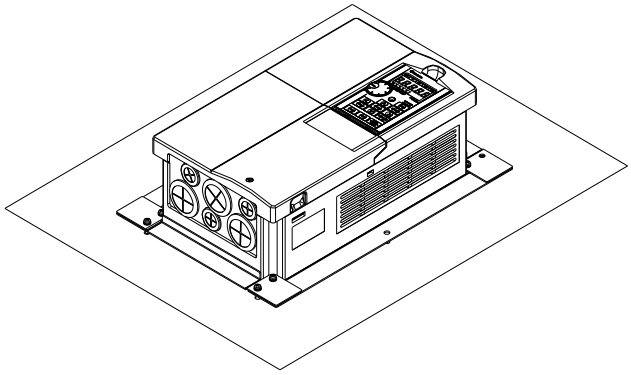

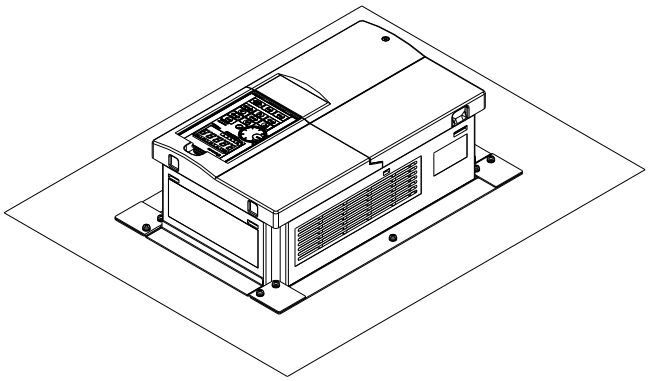

3.8.3 Frame C

Frame C：SF3-043-22K/18.5KG~ SF3-043-45K/37KG

✓ Model name: FMK303 order code: SNKFMK303

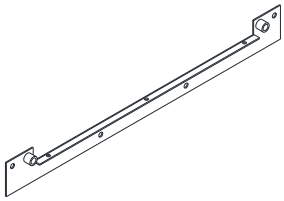

Accessories 1*2

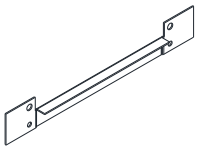

Accessories 2*2

Screw 1*12-M6*15

Screw 2*6-M4*10

✓ Cutout dimension

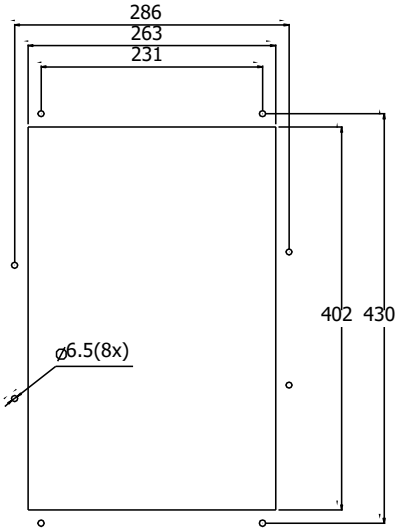

1. Place 6*2 (M4) through accessory 1 and the inverter then fasten the screws (as the following figure shows). 『Screw torque:8~10kg-cm』

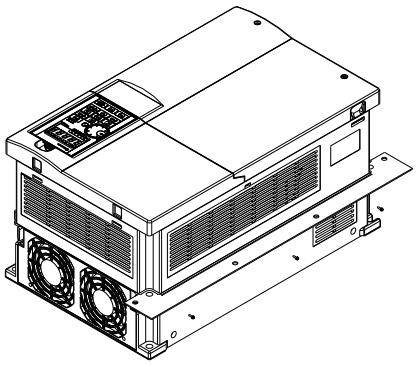

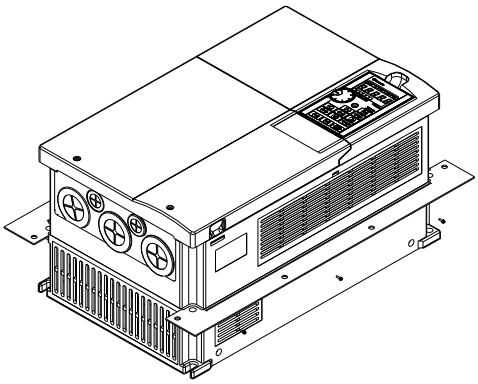

2. Install accessories 1&2 by fastening screw 1*4 (M6) (as the following figure shows). 『Screw torque: 65~75K/90KFg-cm』

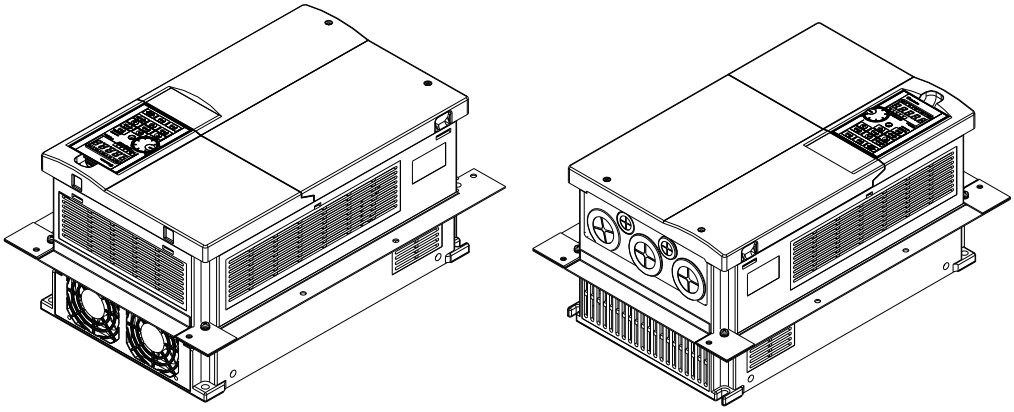

3. Place screw 1 * 8 (M6) through accessories 1&2 and the plate then fasten the screws (as the following figure shows). 『Screw torque: 65~75K/90KFg-cm』

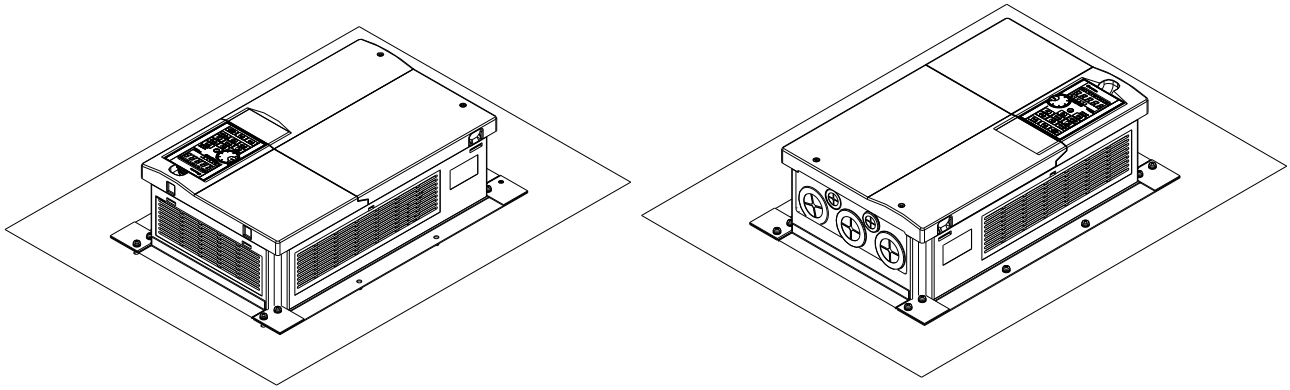

3.8.4 Frame D/E/F/G/H

Frame D/E/F/G/H：SF3-043-55K/45KG~ SF3-043-355K/315KG

✓ Cutout dimension

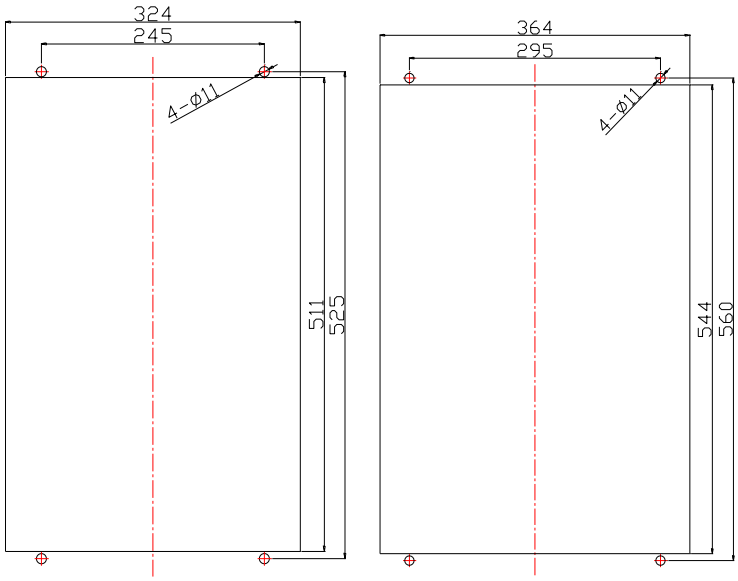

Frame D Frame E

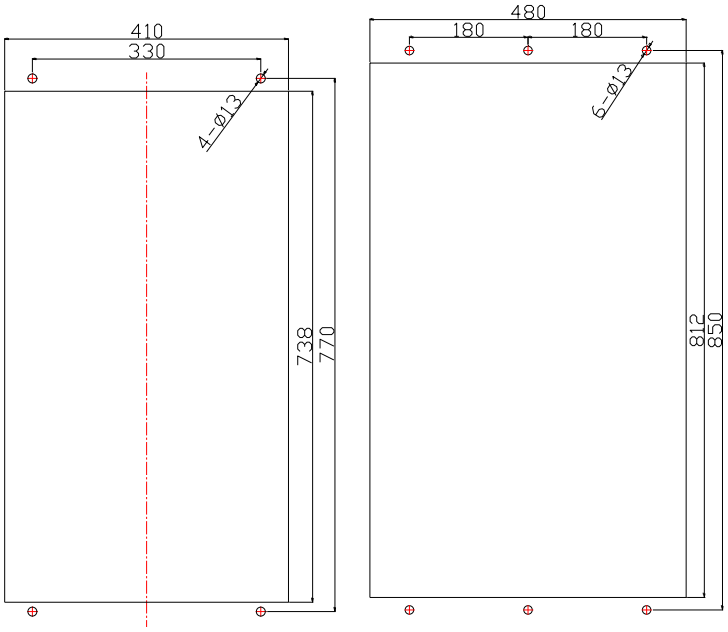

Frame F Frame G

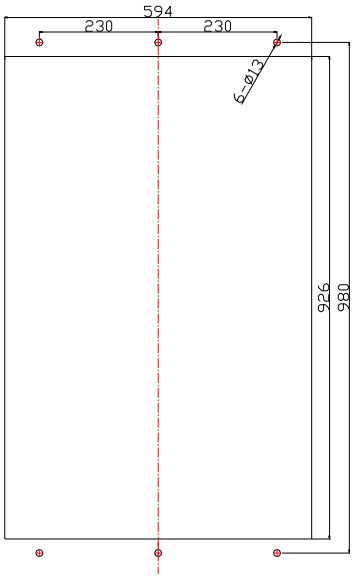

Frame H

✓ Installation flow chart

◆ Shift and removal of a rear side installation frame

An installation frame is attached to both ends of the inverter.

Change the position of the rear side installation frame on both ends of the inverter to the front side as shown on the right.

When changing the installation frames, make sure that the installation orientation is correct.

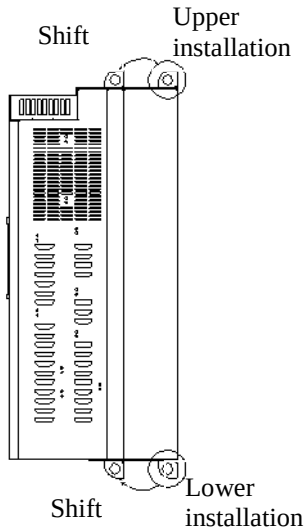

◆ Installation of the inverter into the electrical cabinet

As shown on the right, push the inverter heat sink portion outside the enclosure and fix the enclosure and inverter with upper and lower installation frame.

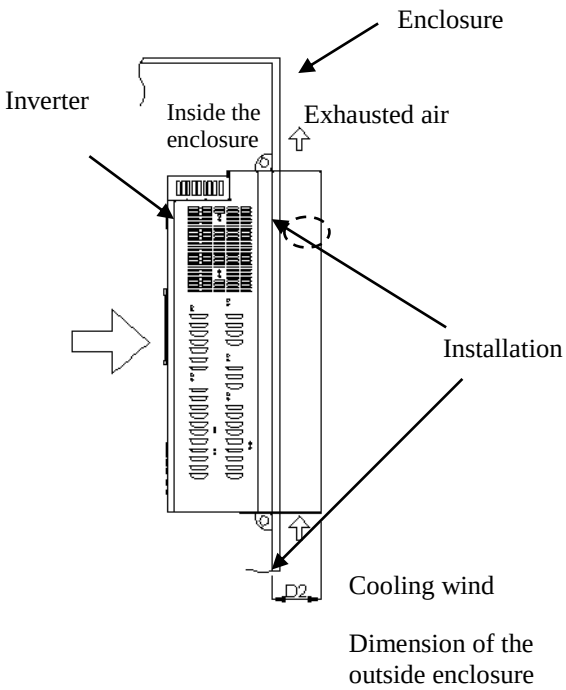

Model	D2(mm)
SF3-043-55K/45KG	137.5
SF3-043-75K/55KG	
SF3-043-90K/75KG	
SF3-043-110K/90KG	137.5
SF3-043-132K/110KG	
SF3-043-160K/132KG	145.5
SF3-043-185K/160KG	
SF3-043-220K/185KG	150.0
SF3-043-250K/220KG	
SF3-043-280K/250KG	
SF3-043-315K/280KG	181.5
SF3-043-355K/315KG	

3.9 Conduit box kit

3.9.1 Frame D conduit box appearance

Frame D：SF3-043-55K/45KG~ SF3-043-90K/75KG

✓ Type name: WBK301 Order code: SNKWBK301

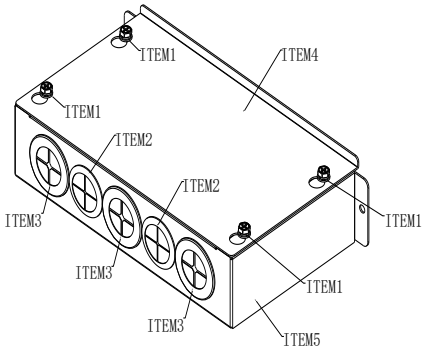

ITEM	Description	Qty.
1	Screw M6*15	4
2	Rubber 34	2
3	Rubber 42	3
4	Conduit box cover	1
5	Conduit box base	1

3.9.2 Frame E/F conduit box appearance

Frame E/F：SF3-043-110K/90KG ~ SF3-043-185K/160KG

Frame	Type name	Ordering code:
E	WBK302	SNKWBK302
F	WBK303	SNKWBK303

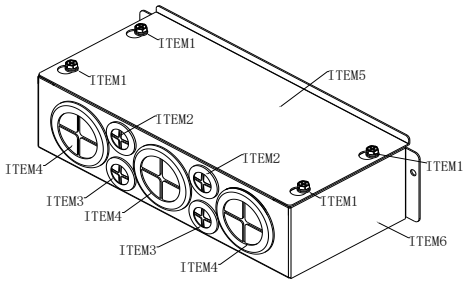

ITEM	Description	Qty.
1	Screw M6*15	4
2	Rubber 28	2
3	Rubber 34	2
4	Rubber 60	3
5	Conduit box cover	1
6	Conduit box base	1

3.9.3 Frame G/H conduit box appearance

Frame G/H：SF3-043-220K/185KG ~ SF3-043-355K/315KG

Frame	Type name	Ordering code:
G	WBK304	SNKWBK304
H	WBK305	SNKWBK305

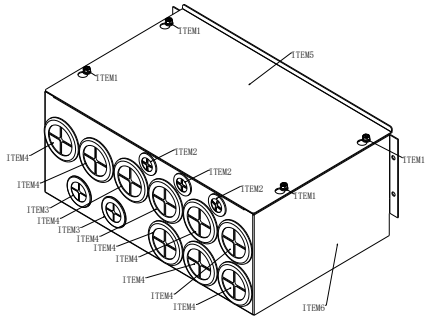

ITEM	Description	Qty.
1	Screw M6*15	4
2	Rubber 34	3
3	Rubber 42	2
4	Rubber 60	9
5	Conduit box cover	1
6	Conduit box base	1

3.10 Replacement procedure of fan

3.10.1 Frame A

Frame A ： SF3-043-5.5K/3.7KG，SF3-043-7.5K/5.5KG

1. Press the hooks on both side of the fan to remove the fan (as shown below).	2. Disconnect the fan connector, and then remove the fan (as shown below).
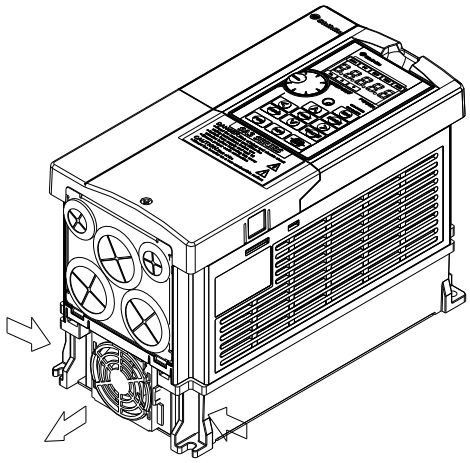	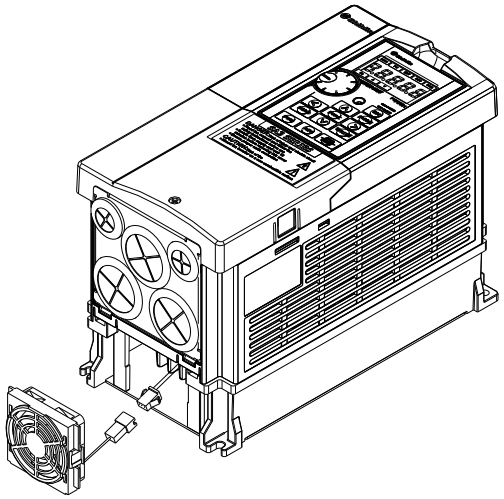

3.10.2 Frame B

Frame B ： SF3-043-11K/7.5KG~ SF3-043-18.5K/15KG

1. Press the hooks on both side of the fan to remove the fan (as shown below).	2. Disconnect the fan connector , and then remove the fan (as shown below).
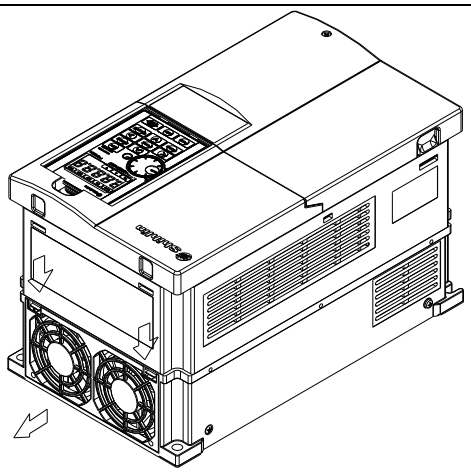	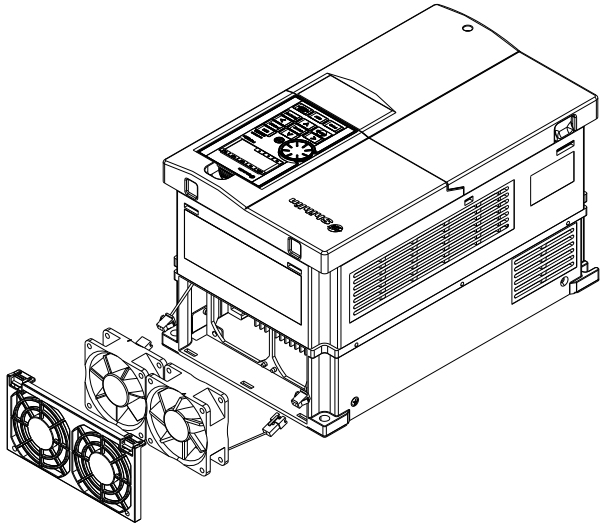

3.10.3 Frame C

Frame C：SF3-043-22K/18.5KG~ SF3-043-45K/37KG

1. Press the hooks on both side of the fan to remove the fan (as shown below).	2. Disconnect the fan connector, and then remove the fan (as shown below).
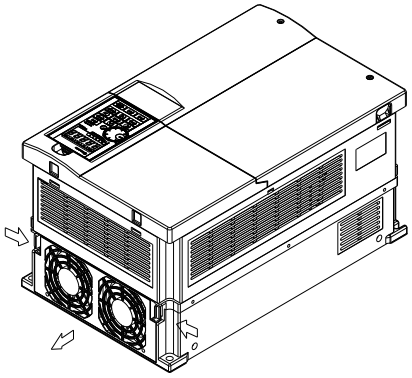	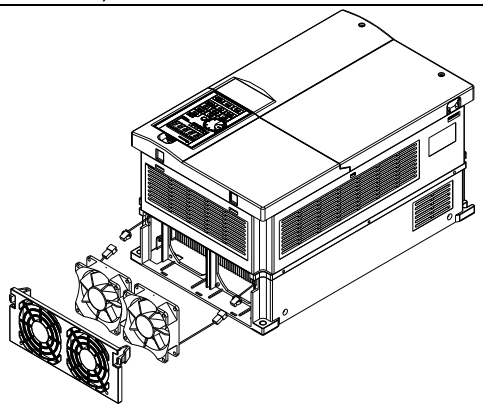

3.10.4 Frame D/E/F

Frame D/E/F ： SF3-043-55K/45KG~ SF3-043-185K/160KG

Loosen and remove screw and demount the power connector of the fan to successfully remove the fan. Screw torque: 24~26kgf-cm (20.8~25.6in-ibf)

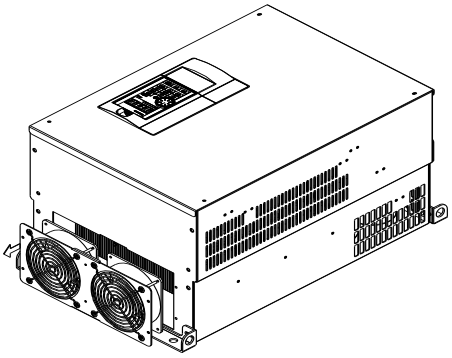

3.10.5 Frame G/H

Frame G/H：SF3-043-220K/185KG~ SF3-043-355K/315KG

1) Remove the fan cover fixing screws, and remove the fan cover.
2) Disconnect the fan connector and remove the fan block.
3) Remove the fan fixing screws, and remove the fan.

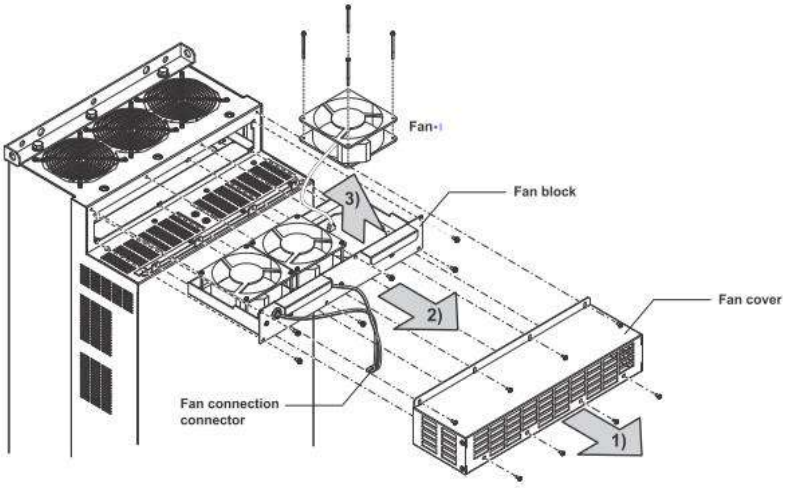

*1 The number of cooling fans differs according to the inverter capacity.

The number of cooling fans differs according to the inverter capacity.

4. BASIC OPERATION

4.1 Component name of keypad(PU 301)

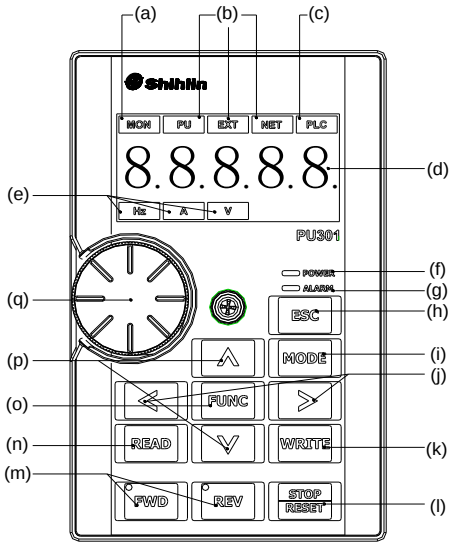

NO.	Operation parts	Name	Content
(a)	MON	Monitor mode indicator	MON: ON to indicate the monitoring mode.
(b)	PU EXT NET	Operation mode indicator	PU: ON to indicate the PU operation mode, flickers in the H1~H5 operation mode. EXT: ON to indicate the external operation mode. NET: ON to indicate the communication operation mode.
(c)	PLC	PLC function indicator	ON to indicate when the PLC function on.
(d)	8.8.8.8.8.	Monitor (5-digit LED)	Shows the frequency, parameter number, and parameter value, etc.
(e)	Hz A V	Unit indicator	Hz: On indicate the output frequency A: On indicate the output current V: On indicate the output voltage.
(f)	POWER	Power indicator	ON to indicate the panel power on.
(g)	ALARM	Alarm indicator	ON to indicate the inverter alarm.
(h)	ESC	ESC button	Escape from the current interface.
(i)	MODE	MODE button	Switch to different modes.
(j)	< >	Left button, Right button	When setting value, navigate through the digit.
(k)	WRITE	WRITE button	Writes parameter value, frequency, etc.
(l)	STOP/RESET	STOP/RESET button	Stops commands. Reset the inverter alarm.
(m)	FWD REV	FWD button REV button	FWD: Starts forward rotation. The LED is on during forward operation. REV: Starts reverse rotation. The LED is on during reverse operation.
(n)	READ	READ button	Read the parameter. Enter into the next menu.
(o)	FUNC	FUNC button	Enter into the special operation menu. (Note)
(p)	∧ ∨	UP button DOWN button	UP: Increase the value. Switch the option. DOWN: Decrease the value. Switch the option.
(q)		M Setting dial	Clockwise rotation equals to UP button. Counter clockwise rotation equals to DOWN button.

Component name of keypad (PU 301)

Note:

The special operation menu may be accessible upon pressing the button FUNC, as shown in the following table:

Menu	Name	Press READ button to enter into next function description
Pr.CP	Parameter copy	0: No action.
		1: Copy the inverter parameter values into the keypad
Pr.CA	Parameter paste	0: No action.
		1: Paste the copied parameter values in parameter unit into the inverter (Please first set the inverter parameters to default, and then paste the parameter. This action is only valid in the same series and types.)
Er.CL	Alarm clear	0: No action.
		1: Clear all alarm and alarm information.
rESr	Inverter reset	0: No action.
		1: Reset the inverter.
ALLC	Parameter set to default setting	0: No action.
		1: The inverter parameters are set to default.
Pr.Cr	Part of parameters set to default	0: No action.
		1: Part of inverter parameters are set to default
PrGr	Parameter mode	0: P parameter mode
		1: Parameter group mode
PU_F	Auto write frequency selection	0: After the frequency changes, the frequency will not auto write into the inverter.
		1: After the frequency changes,the frequency will auto write into the inverter RAM after 0.5s, write into the inverter EEPROM after 10s.
		2: After the frequency changes, the frequency will auto write into the inverter RAM after 0.5s, write into the inverter EEPROM after 30s.
E.HIS	Alarm record	Display the recent four alarm codes (Read only)
Sn	Inverter version	Display the version number of the inverter (Read only)
PUSn	Parameter unit version	Display the version number of PU301 (Read only)

For example: From FUNC to Alarm clear Er.CL menu, the operation flow chart is as follows:

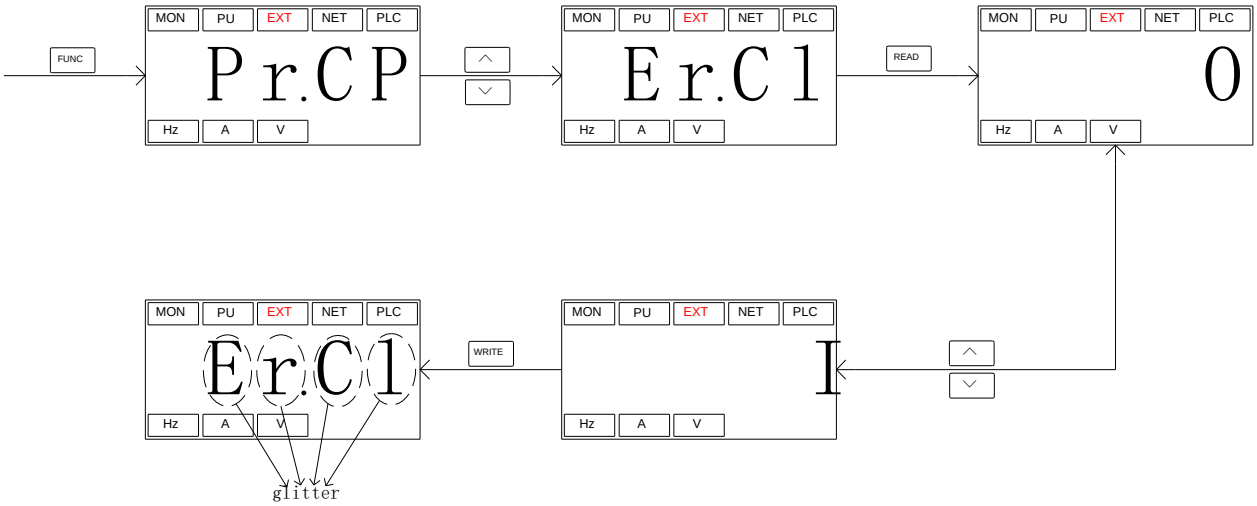

4.2 Operation modes of the inverter

The operation modes are related to the reference source of the target frequency and the signal source of the motor starting. The Shihlin SF3-TYPE inverter has a total of ten kinds of operation modes,namely, “PU mode (PU)”, “JOG mode(JOG)”, “external mode(OPnd) ”, ”communication mode(CU) ”, “combined mode 1 (H1)”, ”combined mode 2(H2) ”, “combined mode 3(H3) ”, “combined mode 4(H4) ” and “combined mode 5(H5) ” and the second operation mode.

- You can use keypad to monitor the output frequency, the output voltage and the output current, as well as to view the alarm message, the parameter setting and the frequency setting. The keypad has four work modes, namely, “operation mode”, “monitoring mode”, “frequency setting mode” and “parameter setting mode”.

Related parameters	Values	Operation mode	The reference source of target frequency	The signal source of motor starting	Remarks
Operation mode selection 00-16(P.79)	0	PU mode(PU)	PU (keypad)	FWD or REV button for PU(keypad)	The “PU mode”, “JOG mode” and “external mode” are interchangeable
		JOG mode(JOG)	The setting value of 01-13(P.15)	FWD or REV button for PU(keypad)	
		External mode(OPnd)	“External voltage/current signal”, “combination of multi-speed stage levels” and external JOG(01-13(P.15))	External forward and reverse terminals	
			Frequency given by (03-09(P.550))		
			Frequency of each section in the programmed operation mode 04-19~ 04-26 /P.131~P.138	External STF terminal	
	1	PU mode(PU)	Equal to the “PU mode” when 00-16 (P.79) = 0		The “PU mode” and “JOG mode” are interchangeable.
		JOG mode(JOG)	Equal to the “PU mode” when 00-16(P.79) = 0		
	2	External mode(OPnd)	Equal to the “External mode” when 00-16(P.79) = 0		
	3	Communication mode(CU)	Communication	Communication	
	4	Combined mode 1 (H1)	PU parameter unit	External forward and reverse terminals	
	5	Combined mode 2(H2)	“External voltage / current signal”, “combination of multi-speed stage levels”, frequency given by pulse(03-09(P.550))	FWD or REV button for PU parameter unit	
	6	Combined mode 3 (H3)	Communication, “combination of multi-speed stage levels” and External JOG(01-13(P.15))	External forward and reverse terminals	
	7	Combined mode 4 (H4)	“External voltage / current signal”, “combination of multi-speed stage levels”, frequency given by pulse(03-09(P.550))	Communication	
	8	Combined mode 5 (H5)	PU operation panel, “combination of multi-speed stage levels” and External JOG (01-13(P.15))	External forward and reverse terminals	
	99999	Second operation mode(rEFE)	Sets by 00-17(P.97)	Sets by 00-18(P.109)	

- When 00-16(P.79) = 0, the external mode (OPnd) is the default mode after the inverter is turned on. Use 00-16(P.79) to switch the operation mode.

4.2.1 Flow chart for switching the operation mode

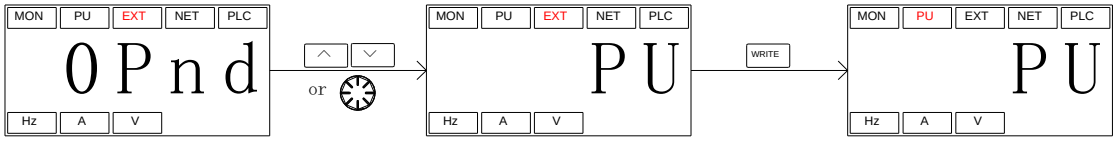

Note: 1. In “PU mode”, parameter unit screen displays PU, and the indicator in PU will light up.
2. In “external mode”, parameter unit screen displays 0Pnd, and the indicator in EXT will light up.
3. In “combined mode 1, 2, 3, 4, or 5”, the indicator in PU will flash on the keypad screen.
4. In “JOG mode”, the indicator in PU will light up.
5. When 00-16(P.79) =3, the indicator in NET will light up.
6. No flow chart when 00-16(P.79) is set to =2, 3, 4, 5, 6, 7 or 8 because the operation mode will not switch.

4.2.2 Flow chart for switching the working mode with PU301 keypad

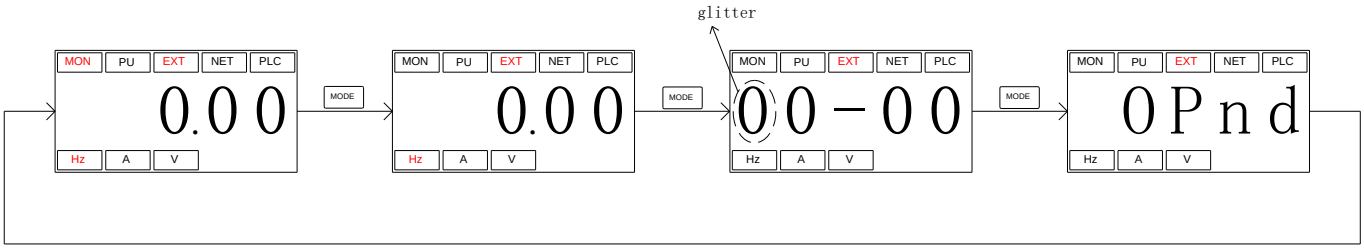

Note: 1. Please refer to section 4.2.3 for detailed operation steps under monitoring mode.
2. Please refer to section 4.2.4 for detailed operation steps under frequency setting mode.
3. Please refer to section 4.2.5 for detailed operation steps under parameter setting mode.
4. Please refer to Section 4.2.1 for detailed operation steps under switching operation mode.

4.2.3 Operation flow charts for monitoring mode with PU301 keypad

- Take PU mode for example:

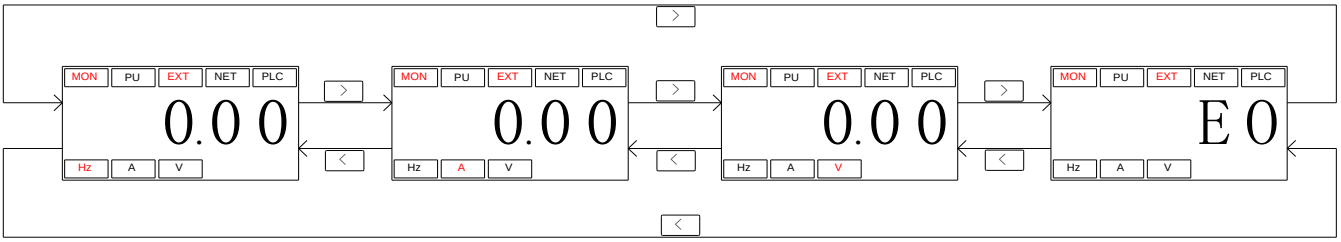

Note: 1. In “monitoring output frequency” mode, indicator in MON and Hz will light up, and the screen will display current output frequency.
2. In “monitoring output voltage” mode, indicator in MON and V will light up, and the screen will display current output voltage.
3. In “monitoring output current” mode, indicator in MON and A will light up, and the screen will display current output current.
4. When in “browsing alarm record”mode, indicator in MON will light up, and the screen will display current alarm code.
5. For alarm codes, please refer to Appendix 2.

4.2.4 Operation flow charts for frequency setting mode with PU301 keypad

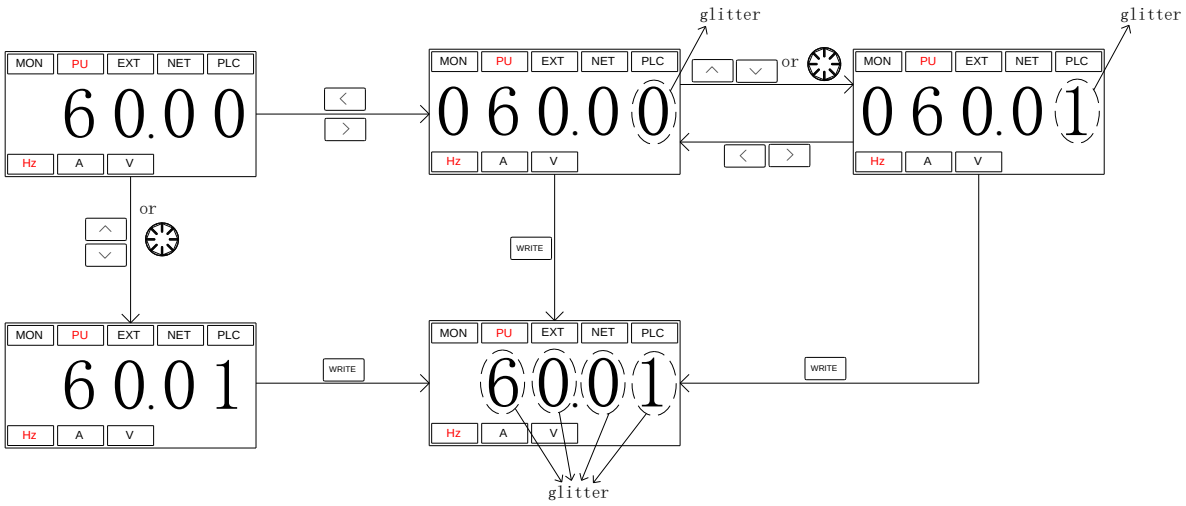

Note: 1. Use keypad dial to change frequency when the inverter is running.

2. Under frequency setting mode,indicator in Hz will light up, but MON will NOT light up.

3. When setting frequency under PU mode, the set value cannot exceed the upper frequency. When high frequency is needed, the upper frequency should be changed first.

4.2.5 Operation flow charts for parameter setting mode with PU301 keypad

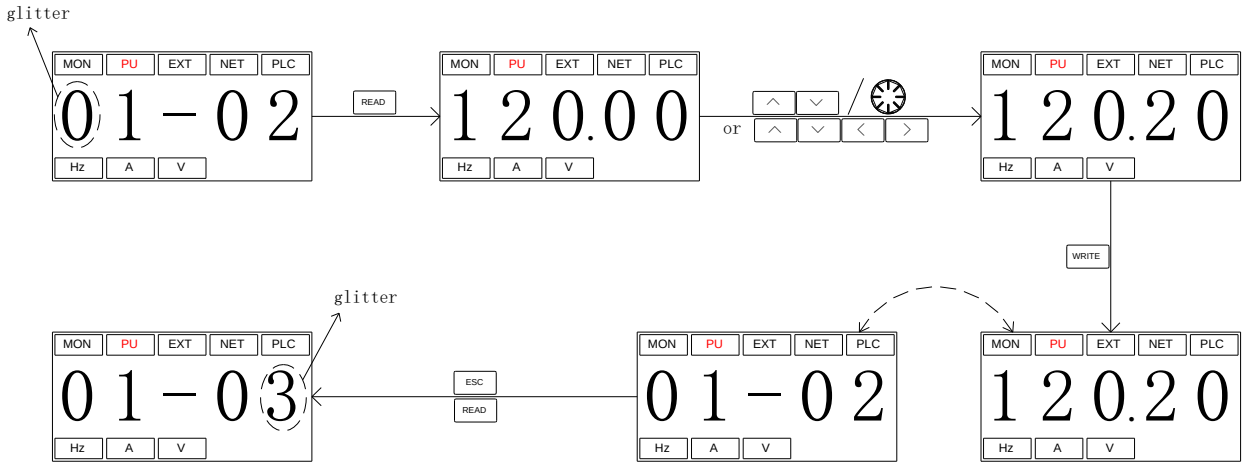

Note:Indicator in Hz and MON will NOT light up under parameter setting mode. Please Use WRITE to write the parameter.

4.3 Basic operation procedures for different modes

4.3.1 Basic operation procedures for PU mode (00-16 (P.79) = 0 or 1)

Step	Description
1	• Switch operation mode to PU mode, and indicator in PU will light up. Note: 1. When 00-16(P.79) =0, the inverter will first be in external mode after power on or reset. 2. For selecting and switching operation mode, please refer to section 4.2.
2	• Enter frequency setting mode and write target frequency into memory. Note: For detailed setting procedures, please refer to section 4.2.4.
3	• Press FWD or REV to run the motor. At this point, indicator in FWD or REV will flash to indicate that the motor is running. The keypad will automatically switch to monitor mode and display the current output frequency. Note: 1. For detailed operation steps for monitoring mode, please refer to section 4.2.3. 2. While the motor is running, the user can enter frequency setting mode to change target frequency for regulating the motor speed.
4	• Press STOP/RESET and the motor will begin to decelerate until it comes to a full stop. • Indicator in FWD or REV will not turn off until the inverter stops outputting voltage.

4.3.2 Basic operation procedures for external mode (00-16(P.79) = 0 or 2)

Step	Description
1	• Switch operation mode to external mode, screen will display OPnd and indicator in EXT will light up. Note: 1.When00-16(P.79) =0, after power on or reset, press MODE to switch to operation mode, inverter will first switch to external mode,then use dial or up down key to switch to PU mode; 2. When 00-16(P.79) =2, inverter will always be in external mode ; 3. For selecting and switching operation mode, please refer to section 4.2.
2	• The target frequency is set by external terminals (default priority from high to low): • If the program operating mode is chosen, please refer to section 5.4.1 function selection of digital input and 5.5.2 programmed operation mode. • If the target frequency is set by multi-speed stage levels, please refer to 04-00(P.4) in Chapter 5. • If the target frequency is set by PWM pulse input, please refer to Chapter 5.4.1. • If the target frequency is set by the input signal across terminal 2-5, please refer to 02-09(P.38) in Chapter 5. • If the target frequency is set by the input signal across terminal 4-5, please refer to 02-21(P.39) in Chapter 5. • If the target frequency is set by the input signal across terminal 3-5, please refer to 02-30(P.508) in Chapter 5. • If the target frequency is set by the high-speed pulse input across terminal HDI, please refer to Chapter 5.3.8.
3	• Turn on STF or STR to run the motor. • At this point, indicator in FWD or REV will flash, indicating that the motor is running. Note: 1. For setting up the starting terminals STF and STR, please refer to 00-15(P.78) in chapter 5.1.8 and 5.4.1 function selection of digital input. 2. For detailed operation steps for the monitor mode, please refer to section 4.2.3. 3. If programmed operation mode is chosen, then STF and STR will become the starting signal and the pause signal, instead of being forward or reverse terminals.
4	•Turn off STF or STR to decelerate the motor until it comes to a full stop. • Indicator in FWD or REV will not turn off until the inverter stops outputting voltage.

4.3.3 Basic operation procedures for JOG mode (00-16(P.79) = 0 or 1)

Step	Description
1	• Switch the operation mode to the JOG mode and indicator in PU will light up, the display shows JOG. Note: 1. For detailed operating procedures for the monitor mode, please refer to section 4.2.
2	• Press FWD or REV to run the motor. At this point, indicator in FWD or REV will flash, indicating that the motor is running. • Release FWD or REV to decelerate the motor until it comes to a full stop. Indicator in FWD or REV will not turn off until the inverter stops the output. Note: 1. For detailed operating procedures for monitor mode, please refer to section 4.2.3. 2. In JOG mode, target frequency is the value of 01-13(P.15), and the acceleration / deceleration time is the value of 01-14(P.16). Please refer to 01-13(P.15) in chapter 5.

4.3.4 Basic operation procedures for communication mode (00-16(P.79) = 3)

◆ In communication mode, user can set parameters and run/stop or reset inverters by communication. Please refer to Communication function related parameters for details.

4.3.5 Basic operation procedures for combined mode 1 (00-16(P.79) = 4)

Step	Description
1	• In Combined Mode 1, indicator in PU will flash. Note: 1. For detailed operation procedures for monitor mode, please refer to section 4.2.
2	• Enter frequency setting mode and write target frequency into memory. Note: For setting details, please refer to section 4.2.4.
3	• Set target frequency via PU301 keypad and start the inverter by digital input terminals. • At this point, indicator in FWD or REV will flash, indicating that the motor is running. Note: For detailed operation procedures for monitor mode, please refer to section 4.2.3.
4	• When digital input terminals output stop signals, motor will decelerate until it comes to a full stop. • Indicator in FWD or REV will not turn off until the inverter stops outputting.

4.3.6 Basic operation procedures for combined mode 2 (00-16(P.79) = 5)

Step	Description
1	• In Combined Mode 2, indicator in PU will flash. Note: 1. For detailed operation procedures for monitor mode, please refer to section 4.2.
2	• Target frequency is set by external terminals (default priority from high to low): • If the programmable operating mode is chosen, please refer to section 5.4.1 function selection of digital input and 5.5.2 programmed operation mode. • If target frequency is set by multi-speed levels, please refer to 04-00(P.4) in chapter 5. • If target frequency is set by PWM pulse input, please refer to section 5.4.1. • If target frequency is set by input signal across terminal 2-5, please refer to 02-09(P.38) in chapter 5. • If target frequency is set by input signal across terminal 4-5, please refer to 02-21(P.39) in chapter 5. • If target frequency is set by input signal across terminal 3-5, please refer to 02-30(P.508) in chapter 5. • If target frequency is set by high-speed pulse input across terminal HDI, please refer to section 5.3.8.
3	• Press FWD or REV on PU301keypad to run the motor. At this point, indicator in FWD or REV will flash, indicating that the motor is running. Note: 1. For detailed operation procedures for monitoring mode, please refer to section 4.2.3. 2. While the motor is running, user can enter frequency setting mode to change the target frequency for regulating motor speed.
4	• Press STOP RESET and the motor will begin to decelerate until it comes to a full stop. • Indicator in FWD or REV will NOT turn off until the inverter stops outputting.

4.3.7 Basic operation procedures for combined mode 3 (00-16(P.79) = 6)

Step	Description
1	• In Combined Mode 3, indicator in PU will flash. Note: 1. For detailed operation procedures for monitor mode, please refer to section 4.2.
2	• Target frequency is determined by communication: •When RL, RM, RH and REX of multi-speed stage levels are “on”, target frequency is determined by combination of multi-speed stage levels (Please refer to 04-00~04-14(P.4~P.6、P.24~P.27、P.142~P.149), 03-00~03-09(P.80~P.84、P.86、P.126~P.128、P.550)). • When external JOG is “on”, target frequency is determined by 01-13(P.15). Acceleration / deceleration time is set by the value of 01-14(P.16).
3	•The inverter starting is activated by the external Run Forward or Run Reverse terminals. At this point, indicating lamp FWD or REV will flash, indicating that the motor is running. •Functions of 00-02(P.996, P.998, P.999) can be accomplished by communication. Note: 1. For detailed operation procedures for monitoring mode, please refer to section 4.2.3.
4	• When the digital input terminals output stop signals, motor will decelerate until it comes to a full stop. • Indicator in FWD or REV will not turn off until the inverter stops outputting.

4.3.8 Basic operation procedures for combined mode 4 (00-16(P.79) = 7)

Step	Description
1	• In Combined Mode 4, indicator in PU will flash. Note: 1. For detailed operation procedures for monitor mode, please refer to Section 4.2.
2	• Target frequency of the inverter is determined by the external terminals “external voltage signal”, “external current signal”, or “combination of multi-speed stage levels”.
3	•Inverter starting is activated by communication (including “Reset”). At this point, indicating lamp FWD or REV will flash, indicating that the motor is running. Note: 1. For detailed operation procedures for the monitoring mode, please refer to Section 4.2.3. 2. While the motor is running, the user can enter into the frequency setting mode to change the target frequency for regulating the motor speed.
4	• When communication sends in stop command, the motor will decelerate until it comes to a full stop. • Indicator in FWD or REV will not turn off until the inverter stops outputting.

4.3.9 Basic operation procedures for combined mode 5 (00-16(P.79) = 8)

Step	Description
1	• In Combined Mode 5, indicator in PU will flash. Note: 1. For detailed operating procedures for monitor mode, please refer to section 4.2.
2	• Target frequency of the inverter is set by keypad: • When RL, RM, RH and REX for multi-speed stage levels are “on”, target frequency is determined by the combination of multi-speed stage levels (please refer to04-00~04-14(P.4~P.6、P.24~P.27、P.142~P.149), 03-00~03-09(P.80~P.84、P.86、P.126~P.128、P.550)). • When external JOG is “on”, target frequency is determined by 01-13(P.15). Acceleration / deceleration time is set by the value in 01-14(P.16).
3	•Inverter starting is triggered by external Run Forward or Run Reverse terminals. Note: 1. For detailed operation procedures for the monitoring mode, please refer to section 4.2.3. 2. While the motor is running, the user can enter frequency setting mode to change the target frequency for regulating motor speed.
4	• When digital input terminals output stop signals, the motor will decelerate until it comes to a full stop. • Indicator in FWD or REV will not turn off until the inverter stops outputting.

4.3.10 Basic operation procedures for second operation mode (00-16(P.79) = 99999)

◆ In second operation mode, target frequency is determined by 00-17(P.97), and the run command is determined by 00-18(P.109), please refer to section 5.1.9 Operation mode selection for related description and section 4.3.1~4.3.5 for related operation method.

4.4 Running

4.4.1 Check and preparation before running

Before starting the running, the following shall be checked:

1. Check if the wiring is correct. Ac motor driver output terminals (U/T1, V/T2, W/T3) cannot be connect to the power. Confirm that grounding terminal ( ) is well grounded.
2. Confirm that there is no short circuit or short circuit to ground between the terminals or each exposed live part
3. Confirm all terminal connections, and check if plug connectors (optional) and screws are all fastened.
4. Confirm that the motor is not connected to any load or mechanism.
5. All switches are in off state before the power is turned on. When the power is turned on, the inverter will not start and no abnormal action will occur.
6. Turn on the power only after the cover is well placed.
7. Do not operate the switch with wet hands.
8. Make sure of the following after power on:
   (1). PU301 power indicator in POWER will light up, alarm indicator in ALARM won't light up.
   (2). PU301 keypad, both indicator in Hz and EXT will light up.

4.4.2 Running methods

For every running methods, please refer to basic operation procedures in chapter 4 and parameter description in chapter 5. Select the most appropriate operation methods according to the application requirements and regulations. The most commonly used operation methods are shown below:

Running method	Source of the target frequency	Source of the running signal
Keypad operation	∧ or ∨ or	FWD or REV
External terminal signal operation	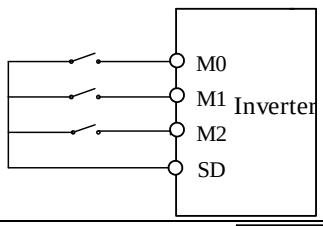 Parameter setting 04-00(P.4)=40 04-01(P.5)=30 04-02(P.6)=10	Input by digital input terminal: STF-SD STR-SD
	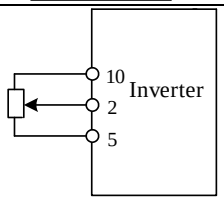 2-5 terminal input	

Note: Please refer to 03-00~03-09(P.80~P.84、P.86、P.126~P.128、P.550) , 03-25~03-30(P.551~ P.556) for function selection and purposes of the multi-function digital input terminal. For related wiring, please refer to section 3.5.

4.4.3 Test run

- Check cables and abnormalities before the test run. After power on, the inverter is in external mode.

1. After power on, make sure that the indicator in POWER is on.
2. Connect a switch between STF-SD or STR-SD.
3. Connect a potentiometer between 2-5-10 or provide 0~5V dc between 2 and 5.
4. Adjust potentiometer or 0~5V dc to a minimum value (under 1V).
5. If STF is on, forward rotation is activated. If STR is on, reverse rotation is activated. Turn off STF or STR to decelerate the motor to a stop.
6. Check the following:
   1).Whether the direction of motor rotation is correct.
   2).Whether the rotation is smooth (check for noise and vibration).
   3).Whether the acceleration / deceleration is smooth.

- If there is an keypad, do the following:

1. Make sure that the keypad is connected to the inverter properly.
2. Change the operation mode to PU mode after power on, and the screen will display 50/60Hz.
3. Press button to set the target frequency at about 5Hz.
4. Press FWD for forward rotation and REV for reverse rotation. Press STOP/RESET to decelerate the motor to a stop.
5. Check the following:
   1).Whether the direction of motor rotation is correct.
   2).Whether the rotation is smooth (check for noise and vibration).
   3).Whether the acceleration / deceleration is smooth.

- If it runs successfully, continue the trial run by increasing the frequency and go through the above procedure. After confirming that there are no abnormalities, it can be put into operation.

Note: If the operation of the inverter and motor is abnormal, stop the operation immediately and check the cause of the abnormality according to “Troubleshooting”. After the inverter stops outputting, if the main circuit power terminals R/L1, S/L2, T/L3 are not disconnected, if the inverter's output terminals U/T1, V/T2, W/T3 are touched, it may cause an electric shock. In addition, even if the main loop power supply is turned off, it takes a certain time for the capacitor to discharge. After the main circuit power is cut off, wait until the power indicator is off, and measure the DC circuit voltage with a voltmeter to confirm that it has drop below the safe voltage level before touching the internal circuit of the inverter.

5. PARAMETER DESCRIPTION

5.1 System parameter group 00

Group	Parameter Number	Name	Setting Range	Default	Page
00-00	P.90	Inverter model	Read only	Read only	74
00-01	P.188	Firmware version	Read only	Read only	74
00-02	P.996 ~ P.999	Parameter restoration	0: Non-function 1: Alarm history clear (P.996=1) 2: Inverter reset (P.997=1) 3: Restoring all parameters to default values (P.998=1) 4: Restoring some parameters to default values 1 (P.999=1) 5: Restoring some parameters to default values 2 (P.999=2) 6: Restoring some parameters to default values 3 (P.999=3)	0	77
00-03	P.77	Selection of parameters write protection	0: Parameters can be written only when the motor stops. 1: Parameters cannot be written. 2: Parameters can also be written when the motor is running. 3: Parameters cannot be read when in password protection.	0	77
00-04	P.294	Decryption parameter	0~ 65535	0	77
00-05	P.295	Password setup	2~ 65535	0	77
00-06	P.110	Keypad monitoring ☐ selection	X0: When the inverter starts, keypad enters the monitoring mode automatically, screen displays the output frequency. X1: When the inverter starts, screen of the keypad displays target frequency. X2：When inverter starts, keypad enters monitor mode automatically, screen displays current pressure and feedback pressure of the constant pressure system in percentage. X5：When inverter starts, keypad enters monitor mode automatically,screen displays current pressure and feedback pressure of the constant pressure system.(valid with PU301C). 0X: The boot screen is monitor output frequency mode 1X: The boot screen is target frequency setting mode 2X: The boot screen is monitor output current mode 3X: The boot screen is monitor output voltage mode	1	80
00-07	P.161	Multi-function display	0: Output voltage (V) 1: Inverter voltage between (+/P) and (-/N) terminals (V) 2: Temperature rising accumulation rate of inverter (%) 3: Target pressure of the constant pressure system (%) 4: Feedback pressure of the constant pressure system (%) 5: Operation frequency (Hz) 6: Electronic thermal accumulation rate (%) 7: Signal value (V) of 2-5 simulating input terminals 8: Signal value (mA) of 4-5 simulating input terminals (mA/V) 9: Output power (kW) 10: Current rotation speed of the motor (Hz) 11:Positive and reverse rotation signal. 1 represents positive rotation, 2 represents reverse rotation, and 0 represents stopping state 12: NTC temperature (℃) 13: Thermal accumulation rate of motor (%) 14: Reserve 15: Input frequency of terminal HDI (kHz) 16~ 17: Reserve	0	81

Group	Parameter Number	Name	Setting Range	Default	Page
00-07	P.161	Multi-function display	18: Output torque of inverter (%) (Valid only when00-21 (P. 300) or 00-22 (P. 370) is set to 3 ~ 6)	0	81
			19: Digital input terminal signal state		
			20: Digital output terminal signal state		
			21: Actual working carrier frequency		
			22: Signal value (mA) of 3-5 analog input terminals (mA/V)		
			23: Reserve		
			24: Current target frequency		
			25: PTC input percentage		
			26: Target and feedback pressure of the constant ☐ pressure system		
			27: Current rotation speed of the motor (rpm)		
			28: Power factor		
			29: Power accumulated value KWH		
00-08	P.37	Speed display	0: Display output frequency (not mechanical speed)	0.0	83
			0.1~ 5000.0		
			1~ 50000		
00-09	P.259	Speed unit selection	X0: Speed display unit is 1	1	83
			X1: Speed display unit is 0.1		
			0X: No decimal places for power accumulated value KWH		
			1X: 1 decimal digit for power accumulated value KWH		
			2X: 2 decimal digits for power accumulated value KWH		
00-11	P.72	Carrier frequency	Frame A/B: 1~15KHz	2 kHz	83
			Frame C/D: 1~10 kHz	2 kHz	
			Frame E/F: 1~9 kHz	2 kHz	
			Frame G/H: 1~4 kHz	2 kHz	
00-12	P.31	Soft-PWM carrier selection	0: None Soft-PWM operation	0	83
			1: When 00-11(P.72)< 5, Soft-PWM is valid (only apply to V/F control)		
00-13	P.71	Idling braking / DC braking	0: Idling braking	1	84
			1: DC braking		
00-14	P.75	Stop function selection	0: Press STOP button to stop the motor in PU and H2 mode	1	84
			1: Press STOP button to stop the motor in all mode		
00-15	P.78	Forward/reverse rotation prevention selection	0: Forward rotation and reverse rotation are both permitted.	0	85
			1: Reverse rotation is prohibited (Sending reverse command refer to decelerate and stop the motor)		
			2: Forward rotation is prohibited (Sending forward command refer to decelerate and stop the motor)		
00-16	P.79	Operation mode selection	0: “PU mode”, “external mode” and “Jog mode” ☐ are interchangeable	0	85
			1: “PU mode” and “JOG mode” are interchangeable		
			2: “External mode” only		
			3: “Communication mode” only		
			4: “Combined mode 1”		
			5: “Combined mode 2”		
			6: “Combined mode 3”		
			7: “Combined mode 4”		
			8: “Combined mode 5”		
			99999: Second operation mode, run command is set by 00-18(P.109), target frequency is set by 00-17(P.97)		

Group	Parameter Number	Name	Setting Range	Default	Page
00-17	P.97	Second target frequency selection	0: Frequency set by keypad 1: Frequency set by communication RS485 2: Frequency set by analog signal 3: Frequency set by communication card(optional) 4: Reserve 5: Frequency set by HDI pulse	0	85
00-18	P.109	Second start signal selection	0: Start signal given by keypad 1: Start signal given by digital input terminal 2: Start signal given by communication RS485 3: Start signal given by communication card(optional)	0	85
00-19	P.35	Communication mode command source selection	0: In communication mode, start and frequency command is given by communication 1: In communication mode, start and frequency command is given by external terminal	0	85
00-21	P.300	Motor control mode selection	0: Induction motor V/F control 1: Reserve 2: Induction motor simple vector control 3: Induction motor sensor less vector control 4~ 5: Reserve 6: Synchronous motor without PG vector control	0	86
00-22	P.370	Second motor control mode selection	0: Induction motor V/F control 1: Reserve 2: Induction motor simple vector control 3: Induction motor sensor less vector control 4~ 5: Reserve 6: Synchronous motor without PG vector control 99999: Second motor control mode is not selected	99999	86
00-23	P.186	Duty types selection	0: Normal Duty (ND), on fan and pump duty type. 1: Heavy Duty (HD), apply to other duties.	0	87
00-24	P.189	50Hz/60Hz switch selection	0: 60Hz system default value for related parameters. 1: 50Hz system default value for related parameters.	0 1	87
00-25	P.990	Parameter mode setting	0: Parameter is displayed as “group mode” 1: Parameter is displayed as “order number”	0	88
00-26	P.125	Expansion card type	Read only	Read only	88

5.1.1 Inverter information

➢ For searching inverter model, control board firmware version, and the connected expansion card, etc.

Parameter	Name	Default	Setting Range	Content
00-00 P.90	Inverter model	Read only	Read only	---
00-01 P.188	Firmware version	Read only	Read only	Inverter control board firmware version

◆ Inverter model

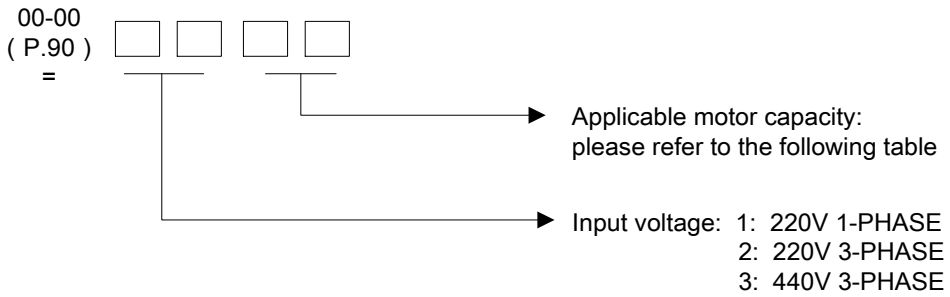

Read Applicable motor capacity:

Value (value of the two low-order bits of 00-00)	Capacity (kw)
6	5.5K/3.7KG
7	7.5K/5.5KG
8	11K/7.5KG
9	15K/11KG
10	18.5K/15KG
11	22K/18.5KG
12	30K/22KG
13	37K/30KG
14	45K/37KG
15	55K/45KG
16	75K/55KG
17	90K/75KG

Value (value of the two low-order bits of 00-00)	Capacity (kw)
18	110K/90KG
19	132K/110KG
20	160K/132KG
21	185K/160KG
22	220K/185KG
23	250K/220KG
24	280K/250KG
25	315K/280KG
26	355K/315KG

Note: The above-mentioned parameters are for reading only, not for writing.

5.1.2 Parameter restoration

➢ Set parameters back to default.

Parameter	Name	Default	Setting Range	Content
00-02 (P.996 ~ P.999)	Parameter restoration	0	0	No function
			1	Clear alarm history (P.996=1)
			2	Inverter reset (P.997=1)
			3	Restoring all parameters to default values (P.998=1)
			4	Restoring some parameters to default values 1(P.999=1)
			5	Restoring some parameters to default values 2(P.999=2)
			6	Restoring some parameters to default values 3(P.999=3)

Setting Parameter restoration

- 1: When 00-02 (P.996 ~ P.999) is set to1, screen will flash Er.CL , the alarm record will be erased after writing, and00-02 (P.996 ~ P.999) is reset to 0.
- 2: When 00-02 (P.996 ~ P.999) is set to 1, screen will flash rESr and inverter will be reset, then 00-02 (P.996 ~ P.999) is reset to 0. After resetting the inverter, the accumulated values in the two thermal relays, “electronic thermal relay” and “IGBT module thermal relay” will be set to zero.
- 3: When 00-02 (P.996 ~ P.999) is set to 3, screen will flash ALLC, all the parameters will be restored to the default values except the parameters in the table 1 below. After parameters are restored, 00-02 (P.996 ~ P.999) is reset to 0.

Exception The parameters in table 1 below will not be restored to the default values:

Group	Parameter Number	Name
00-00	P.90	Inverter model
00-01	P.188	Firmware version
00-24	P.189	50Hz/60Hz switch selection
00-26	P.125	Expansion card type
01-08	P.21	Acceleration/deceleration time unit
03-59	P.585	Monitor digital input terminal signal status on inverter
03-60	P.586	Monitor digital output terminal signal status on inverter
03-61	P.587	Monitor digital input terminal signal status on expansion card
06-27	P.292	Total inverter operation time (minutes)
06-28	P.293	Total inverter operation time (days)
06-29	P.296	Total inverter power on time (minutes)
06-30	P.297	Total inverter power on time (days)
06-44	P.740	E1
06-45	P.741	E2
06-46	P.742	E3
06-47	P.743	E4
06-48	P.744	E5
06-49	P.745	E6
06-50	P.746	E7
06-51	P.747	E8
06-52	P.748	E9
06-53	P.749	E10
06-54	P.750	E11
06-55	P.751	E12

Group	Parameter Number	Name
06-56	P.752	Output frequency duringE1 alarm
06-57	P.753	Output currentduringE1 alarm
06-58	P.754	Output voltage duringE1 alarm
06-59	P.755	Temperature rising accumulation rateduringE1 alarm
06-60	P.756	PN voltage during E1 alarm
06-61	P.757	Total inverter operation time during E1 alarm
06-62	P.758	Inverter operation status code during E1 alarm
06-63	P.759	E1 alarm date (years/months)
06-64	P.760	E1 alarm date (days/hours)
06-65	P.761	E1 alarm date (minutes/seconds)
06-70	P.766	Output frequency during E2 alarm
06-71	P.767	Output currentduringE2 alarm
06-72	P.768	Output voltage duringE2 alarm
06-73	P.769	Temperature rising accumulation rateduringE2 alarm
06-74	P.770	PN voltage during E2 alarm
06-75	P.771	Total inverter operation time during E2 alarm
06-76	P.772	Inverter operation status codeduringE2 alarm
06-77	P.773	E2 alarm date (years/months)
06-78	P.774	E2 alarm date (days/hours)
06-79	P.775	E2 alarm date (minutes/seconds)
13-02	P.285	Low frequency vibration suppression factor
13-03	P.286	High frequency vibration suppression factor

- 4: When 00-02 (P.996 ~ P.999) is set to 4, screen will flash Pr.Cr, all the parameters will be restored to the default values except the parameters in the table 1 and table 2 below after writing. After parameters are restored, 00-02 (P.996 ~ P.999) is reset to 0.

  Exception The parameters in table 2 below and table 1 will not be restored to default values:

Group	Parameter Number	Name
00-21	P.300	Motor control mode selection
02-12	P.192	Minimum positive input voltage of 2-5
02-13	P.193	Maximum positive input voltage of 2-5
02-14	P.194	Percentage correspond to minimum positive input voltage of 2-5
02-15	P.195	Percentage correspond to maximum positive input voltage of 2-5
02-16	P.512	Minimum negative input voltage of 2-5
02-17	P.513	Maximum negative input voltage of 2-5
02-18	P.510	Percentage correspond to minimum negative input voltage of 2-5
02-19	P.511	Percentage correspond to maximum negative input voltage of 2-5
02-25	P.198	Minimum input current/voltage of 4-5
02-26	P.199	Maximum input current/voltage of 4-5
02-27	P.196	Percentage correspond to minimum input current/voltage of 4-5
02-28	P.197	Percentage correspond to maximum input current/voltage of 4-5
02-34	P.548	Minimum input current/voltage of 3-5
02-35	P.549	Maximum input current/voltage of 3-5
02-36	P.546	Percentage correspond to minimum input current/voltage of 3-5
02-39	P.524	Minimum frequency of HDI input
02-40	P.525	Maximum frequency of HDI input
02-41	P.522	Percentage correspond to the minimum frequency of HDI input
02-42	P.523	Percentage correspond to the maximum frequency HDI input
02-46	P.191	AM1 output gain
02-47	P.190	AM1 output bias
02-49	P.536	AM2 output gain
02-50	P.535	AM2 output bias
02-59	P.187	FM calibration coefficient

Group	Parameter Number	Name
05-00	P.301	Motor parameter auto-tuning function selection
05-01	P.302	Motor rated power
05-02	P.303	Motor poles
05-03	P.304	Motor rated voltage
05-04	P.305	Motor rated frequency
05-05	P.306	Motor rated current
05-06	P.307	Motor rated rotation speed
05-07	P.308	Motor excitation current
05-08	P.309	IM motor stator resistance
05-09	P.310	IM motor rotor resistance
05-10	P.311	IM motor leakage inductance
05-11	P.312	IM motor mutual inductance
05-12	P.313	PM motor stator resistance
05-13	P.314	PM motor d-axis inductance
05-14	P.315	PM motor q-axis inductance
05-15	P.316	PM motor Back-EMF coefficient
05-17	P.318	Motor inertia
11-00	P.320	Speed control proportional coefficient 1
11-01	P.321	Speed control integral time 1
11-02	P.322	PI coefficient switching frequency 1
11-03	P.323	Speed control proportional coefficient 2
11-04	P.324	Speed control integral time 2
11-05	P.325	PI coefficient switching frequency 2
11-06	P.326	Current control proportional coefficient

- 5: User registered parameter 15-00 (P.900)~15-19(P.919) will not be restored to default value, from 15-00(P.900) to 15-19(P.919), the corresponding parameter values of setting parameter number and the parameters in table 1 above will not be
  restored to the default values. After parameters are restored, 00-02 (P.996 ~ P.999) is reset to 0.

- 6: User registered parameter 15-00(P.900)~15-19(P.919) will not be restored to default value, From 15-00(P.900) to 15-19(P.919), the corresponding parameter values of setting parameter number and the parameters in table 1 and table 2 above will not be restored to the default values. After parameters are restored, 00-02 (P.996 ~ P.999) is reset to 0.

Note: When the parameter is restored to default value or some of the parameters are restored to default value, be sure to wait for the screen to display End, which means that it's complete, and then perform other operations.

5.1.3 Parameter protection

➢ It is used to select whether parameters can be written to prevent changing parameter values due to misoperation.

Parameter	Name	Default	Setting Range	Content
00-03 P.77	Selection of parameters write protection	0	0	Parameters can be written only when the motor stops.
			1	Parameters cannot be written.
			2	Parameters can also be written when the motor is running.
			3	Parameters cannot be read when in password protection.
00-04 P.294	Decryption parameter	0	0~65535	Write the registered password to decrypt the parameter protection.
00-05 P.295	Password setup	0	2~65535	Register password for parameter protection setting.

Setting Selection of parameters write protection

◆ Writing parameters only during stop (00-03(P.77)="0" initial value)
Exception During operation, the parameters below can be written:

Group	Parameter Number	Name
00-03	P.77	Selection of parameters write protection
00-07	P.161	Multi-function display
02-04	P.54	AM1 output function selection
02-05	P.537	AM2 output function selection
02-12	P.192	Minimum positive input voltage of 2-5
02-13	P.193	Maximum positive input voltage of 2-5
02-14	P.194	Percentage correspond to minimum positive input voltage of 2-5
02-15	P.195	Percentage correspond to maximum positive input voltage of 2-5
02-16	P.512	Minimum negative input voltage of 2-5
02-17	P.513	Maximum negative input voltage of 2-5
02-18	P.510	Percentage correspond to minimum negative input voltage of 2-5
02-19	P.511	Percentage correspond to maximum negative input voltage of 2-5
02-25	P.198	Minimum input current/voltage of 4-5
02-26	P.199	Maximum input current/voltage of 4-5
02-27	P.196	Percentage correspond to minimum input current/voltage of 4-5
02-28	P.197	Percentage correspond to maximum input current/voltage of 4-5
02-34	P.548	Minimum input current/voltage of 3-5
02-35	P.549	Maximum input current/voltage of 3-5
02-36	P.546	Percentage correspond to minimum input current/voltage of 3-5
02-37	P.547	Minimum frequency of HDI input
02-39	P.524	Maximum frequency of HDI input
02-40	P.525	Percentage correspond to the minimum frequency of HDI input
02-41	P.522	Percentage correspond to the maximum frequency HDI input
02-42	P.523	Minimum input current/voltage of 3-5
02-44	P.543	FM output function selection
02-45	P.64	AM1 output signal selection

Group	Parameter Number	Name
02-46	P.191	AM1 output gain
02-47	P.190	AM1 output bias
02-48	P.538	AM2 output signal selection
02-49	P.536	AM2 output gain
02-50	P.535	AM2 output bias
02-51	P.55	Analog output frequency display reference
02-52	P.56	Analog output current monitoring reference
02-55	P.592	PT100 voltage level 1
02-56	P.593	PT100 voltage level 2
02-59	P.187	FM calibration coefficient
04-00	P.4	Speed 1 (high speed)
04-01	P.5	Speed 2 ((medium speed)
04-02	P.6	Speed 3 (low speed)
04-03	P.24	Speed 4
04-04	P.25	Speed 5
04-05	P.26	Speed 6
04-06	P.27	Speed 7
04-07	P.142	Speed 8
04-08	P.143	Speed 9
04-09	P.144	Speed 10
04-10	P.145	Speed 11
04-11	P.146	Speed 12
04-12	P.147	Speed 13
04-13	P.148	Speed 14
04-14	P.149	Speed 15
04-19	P.131	Programmed operation mode speed 1

System parameter group 00

Group	Parameter Number	Name
04-20	P.132	Programmed operation mode speed 2
04-21	P.133	Programmed operation mode speed 3
04-22	P.134	Programmed operation mode speed 4
04-23	P.135	Programmed operation mode speed 5
04-24	P.136	Programmed operation mode speed 6
04-25	P.137	Programmed operation mode speed 7
04-26	P.138	Programmed operation mode speed 8
06-17	P.261	Maintenance remind function
06-40	P.288	Alarm code query
06-42	P.290	Alarm message query
06-85	P.1041	Fire mode frequency
06-86	P.1042	Fire mode bypass delay
06-87	P.1043	Fire mode PID target
08-03	P.225	PID target value panel reference
10-19	P.230	Dwell frequency at acceleration

Group	Parameter Number	Name
10-21	P.232	Dwell frequency at deceleration
10-45	P.267	Regeneration avoidance operation selection
10-46	P.268	Regeneration avoidance DC bus voltage level
10-47	P.269	DC bus voltage detection sensitivity at deceleration
10-48	P.270	Regeneration avoidance frequency compensation value
10-49	P.271	Regeneration avoidance voltage gain coefficient
10-50	P.272	Regeneration avoidance voltage gain coefficient

- The parameters cannot be written. (00-03(P.77)="1")

  Exception The parameters below can be written:

Group	Parameter Number	Name
00-03	P.77	Selection of parameters write protection

Group	Parameter Number	Name
00-16	P.79	Operation mode selection

- During operation, the parameters below can also be written (00-03(P.77)="2")

  Exception During operation, the parameters below cannot be written:

Group	Parameter Number	Name
00-00	P.90	Inverter model
00-01	P.188	Firmware version
00-11	P.72	Carrier frequency
00-15	P.78	Forward/reverse rotation ☐ prevention selection
00-16	P.79	Operation mode selection
00-26	P.125	Expansion card type
03-59	P.585	Monitor digital input terminal signal status on inverter
03-60	P.586	Monitor digital output terminal signal status on inverter
03-61	P.587	Monitor digital input terminal signal status on inverter
06-01	P.22	Stall prevention operation level
06-08	P.155	Over torque detection level
06-11	P.160	Stall level when restart
06-21	P.705	Low voltage level
06-22	P.706	Regenerative brake operation level
06-23	P.707	Regenerative brake operation level
06-26	P.710	Capacitor lifetime detection level
06-27	P.292	Total inverter operation time (minutes)
06-28	P.293	Total inverter operation time (days)

Group	Parameter Number	Name
06-43	P.291	Alarm message display
06-44	P.740	E1
06-45	P.741	E2
06-46	P.742	E3
06-47	P.743	E4
06-48	P.744	E5
06-49	P.745	E6
06-50	P.746	E7
06-51	P.747	E8
06-52	P.748	E9
06-53	P.749	E10
06-54	P.750	E11
06-55	P.751	E12
06-56	P.752	Output frequency during E1 alarm
06-57	P.753	Output currentduringE1 alarm
06-58	P.754	Output voltage duringE1 alarm
06-59	P.755	Temperature rising accumulation rateduringE1 alarm
06-60	P.756	PN voltage during E1 alarm
06-61	P.757	Total inverter operation time during E1 alarm

06-29	P.296	Total inverter power on time (minutes)
06-41	P.289	Alarm code display

06-62	P.758	Inverter operation status codeduringE1 alarm

Group	Parameter Number	Name
06-30	P.297	Total inverter power on time (days)
06-64	P.760	E1 alarm date (days/hours)
06-65	P.761	E1 alarm date (minutes/seconds)
06-70	P.766	Output frequency during E2 alarm
06-71	P.767	Output currentduringE2 alarm
06-72	P.768	Output voltage duringE2 alarm
06-73	P.769	Temperature rising accumulation rateduringE2 alarm
06-74	P.770	PN voltage during E2 alarm
06-75	P.771	Total inverter operation time during E2 alarm
06-76	P.772	Inverter operation status codeduringE2 alarm
06-77	P.773	E2 alarm date (years/months)
06-63	P.759	E1 alarm date (years/months)
06-78	P.774	E2 alarm date (days/hours)

Group	Parameter Number	Name
06-79	P.775	E2 alarm date (minutes/seconds)
06-88	P.1044	Fire mode cumulate times
07-17	P.802	CANopen communication status
07-18	P.803	CANopen control status
10-52	P.265	Overexcitation current level
16-00	P.1000	Water supply mode selection
16-01	P.1001	Pump 1 type selection
16-02	P.1002	Pump 2 type selection
16-03	P.1003	Pump 3 type selection
16-04	P.1004	Pump 4 type selection
16-05	P.1005	Pump 5 type selection
16-06	P.1006	Pump 6 type selection
16-07	P.1007	Pump 7 type selection

◆ When in password protection, parameters cannot be read (00-03(P.77)="3")

Exception The parameters below can still be written:

Group	Parameter Number	Name
00-00	P.90	Inverter model
00-01	P.188	Firmware version
00-05	P.295	Password setup
00-08	P.37	Speed display
00-16	P.79	Operation mode selection
00-25	P.990	Parameter mode setting
00-26	P.125	Expansion card type
01-00	P.1	Maximum frequency
01-01	P.2	Minimum frequency
03-59	P.585	Monitor digital input terminal signal status on inverter
03-60	P.586	Monitor digital output terminal signal status on inverter
03-61	P.587	Monitor digital input terminal signal status on inverter
06-26	P.710	Capacitor lifetime detection level
06-41	P.289	Alarm code display
06-43	P.291	Alarm message display
06-44	P.740	E1
06-45	P.741	E2
06-46	P.742	E3
06-47	P.743	E4
06-48	P.744	E5
06-49	P.745	E6

Group	Parameter Number	Name
06-54	P.750	E11
06-55	P.751	E12
06-56	P.752	Output frequency during E1 alarm
06-57	P.753	Output currentduringE1 alarm
06-58	P.754	Output voltage duringE1 alarm
06-59	P.755	Temperature rising accumulation rateduringE1 alarm
06-60	P.756	PN voltage during E1 alarm
06-61	P.757	Total inverter operation time during E1 alarm
06-62	P.758	Inverter operation status codeduringE1 alarm
06-63	P.759	E1 alarm date (years/months)
06-64	P.760	E1 alarm date (days/hours)
06-65	P.761	E1 alarm date (minutes/seconds)
06-53	P.749	E10
06-70	P.766	Output frequency during E2 alarm
06-71	P.767	Output currentduringE2 alarm
06-72	P.768	Output voltage duringE2 alarm
06-73	P.769	Temperature rising accumulation rateduringE2 alarm
06-74	P.770	PN voltage during E2 alarm
06-75	P.771	Total inverter operation time during E2 alarm
06-76	P.772	Inverter operation status codeduringE2 alarm
06-77	P.773	E2 alarm date (years/months)
06-78	P.774	E2 alarm date (days/hours)

06-50	P.746	E7	06-79	P.775	E2 alarm date (minutes/seconds)
06-51	P.747	E8	07-17	P.802	CANopen communication status
06-52	P.748	E9	07-18	P.803	CANopen control status

Setting Password protection

- Registering a password
  1. Write a number (2 ~ 65535) in 00-05 (P.295) as a password, password protection takes effect immediately;
  2. After registering a password, 00-05 (P.295) =1;
- Unlocking password protection
  1. Write the correct password in 00-04 (P.294), and then password protection will be unlocked;
  2. After unlocking the password, 00-04 (P.294) =0, 00-05 (P.295) =1;
  3. If turn the inverter power off and then turn on, it will still restore to the password protection status.
- Password all clear
  1. Write the correct password in 00-04 (P.294) to unlock the password protection;
  2. Write 0 in 00-05 (P.295), password will be all cleared.

Note: If you forget the password, you can enter the same error password three times for 00-04 (P.294), and the interval between two adjacent times does not exceed 10s, the password can be cleared and the user parameters automatically reset to factory defaults.

5.1.4 Monitoring function selection

➢ The item displayed on the keypad can be selected.

Parameter	Name	Default	Setting Range	Content
00-06 P.110	Keypad monitoring selection	1	X0	X0: When the inverter starts, keypad enters the monitoring mode automatically, screen displays the output frequency.(note1)
			X1	X1: When the inverter starts, screen of the keypad displays target frequency.
			X2	When inverter starts, keypad enters monitor mode automatically, screen displays current pressure and feedback pressure of the constant pressure system in percentage (Note 2)
			X5	When inverter starts, keypad enters monitor mode automatically, screen displays current pressure and feedback pressure of the constant pressure system (valid with PU301C)(Note 3)
			0X	0X: The boot screen is monitor output frequency mode
			1X	1X: The boot screen is target frequency setting mode
			2X	2X: The boot screen is monitor output current mode
			3X	3X: The boot screen is monitor output voltage mode
00-07 P.161	Multi-function display	0	0	0: Output voltage (V)
			1	1: Inverter voltage between (+/P) and (-/N) terminals (V)
			2	2: Temperature rising accumulation rate of inverter (%)
			3	3: Target pressure of the constant pressure system (%)
			4	4: Feedback pressure of the constant pressure system (%)
			5	5: Operation frequency (Hz)
			6	6: Electronic thermal accumulation rate (%)
			7	7: Signal value (V) of 2-5 simulating input terminals
			8	8: Signal value (mA) of 4-5 simulating input terminals (mA/V)
			9	9: Output power (kW)
			10	10: Current rotation speed of the motor (Hz)

Parameter	Name	Default	Setting Range	Content
00-07 P.161	Multi-function display	0	11	11: Positive and reverse rotation signal. 1 represents positive rotation, 2 represents reverse rotation, and 0 represents stopping state
			12	12: NTC temperature (℃)
			13	13: Thermal accumulation rate of motor (%)
			14	14: Reserve
			15	15: Input frequency of terminal HDI (kHz)
			16	Reserve
			17	Reserve
			18	18: Output torque of inverter (%) (Valid only when00-21 (P. 300) or 00-22 (P. 370) is set to 3 ~ 6)
			19	19: Digital input terminal signal state
			20	20: Digital output terminal signal state
			21	21: Actual working carrier frequency
			22	22: Signal value (mA) of 3-5 analog input terminals (mA/V)
			23	23: Reserve
			24	24: Current target frequency
			25	25: PTC input percentage
			26	26: Target and feedback pressure of the constant ☐ pressure system
			27	27: Current rotation speed of the motor (rpm)
			28	28: Power factor
			29	29: Power accumulated value KWH

Note: 1. The “output frequency” here is the value after slip compensation.

2.When the startup screen is in output frequency setting mode, the screen will be cut to output frequency setting mode when the “FWD” or “REV” or “STOP” button is pressed.

3. The target frequency setting mode screen displays the target pressure. If target frequency command comes from keypad, target pressure can be set directly in the target frequency setting mode.

4.The multi-function display function is implemented in the monitor voltage mode. For switching to monitor voltage mode, refer to section 4.2.3.

5. Please refer to section 5.4.15 for terminal sequence. The status of the digital input terminal corresponds to 03-59 (P.585), and the status of the digital output terminal corresponds to 03-60 (P.586).

Display Keypad monitoring selection

◆ Display the current target pressure and feedback pressure of the constant pressure system (00-06(P.110)=“X2”). At this point, the screen display shows two sections. A decimal point is used to separate the boundaries. What is on the left is the target pressure of the constant pressure system and what is on the right is the feedback pressure of the constant pressure system.

As shown in this figure

, 20 denotes that the target pressure of the constant pressure system is 2.0kg/cm³; 30 denotes that the feedback pressure of the constant pressure system is 3.0kg/cm³.

◆ The screen shows two sections. A decimal point is used to separate the boundaries, on the left is the target pressure percentage of the constant pressure system and on the right is the feedback pressure percentage of constant pressure system.

As shown in this figure

, "20" means the target pressure percentage of the constant pressure system is 20%, and target pressure is 20%*08-43(P.251); "30" means that the feedback pressure percentage of the constant

pressure system is 30%, and feedback pressure is 30%*08-43(P.251).

- Display the target pressure and feedback pressure of the current constant pressure system (00-06(p.110)= "X5") (valid with PU301C)

  PU301C can display both target pressure and feedback pressure in the same row. The target frequency setting mode screen displays the target pressure. If target frequency command comes from keypad(such as PU mode and H1 mode), target pressure can be set directly in the target frequency setting mode.

Display Multi-function display

- The display value appears in the monitoring voltage mode. Please refer to page 65 (4.2.3 for operational flow chart of monitoring mode).

5.1.5 Running speed display

➢ In the mode of “monitoring output frequency”, the screen displays the corresponding mechanical speed.

Parameter	Name	Default	Setting Range	Content
00-08 P.37	Speed display	0.0	0	0: Display output frequency (not mechanical speed)
			0.1~5000.0	0.1~ 5000.0
			1~50000	1~ 50000
00-09 P.259	Speed unit selection	1	X0	X0: Speed display unit is 1
			X1	X1: Speed display unit is 0.1
			0X	0X: No decimal places for power accumulated value KWH
			1X	1X: 1 decimal digit for power accumulated value KWH
			2X	2X: 2 decimal digits for power accumulated value KWH

Setting Speed display

◆ The setting value of 00-08(P.37) is the mechanical speed of the inverter when output frequency is 60Hz.

For example:

1. If the transmitting belt speed is 950 m/minute when the inverter output frequency is 60Hz, set 00-08(P.37) = 950;
2. After setting, when keypad is in the “output frequency monitoring mode” , the screen will display the speed of the transmitting belt.

Note: 1. The machine speed on the screen is the theoretical value calculated proportionately by the inverter output frequency and the setting value of 00-08(P.37). So there’s minute discrepancy between the displayed machine speed and the actual one.

2. Only when 00-09 (P. 259) is set to 0X, 1X, 2X, the communication monitoring is effective.

5.1.6 PWM carrier frequency

➢ The motor sound can be changed by adjusting PWM carrier frequency properly.

Parameter	Name	Default	Setting Range	Content
00-11 P.72	Carrier frequency	2kHz	1~15 kHz	Frame A/B
			1~10 kHz	Frame C/D
			1~9 kHz	Frame E/F
			1~4KHz	Frame G/H
00-12 P.31	Soft-PWM carrier selection	0	0	None Soft-PWM operation
			1	When 00-11(P.72)< 5, Soft-PWM is valid (only apply to V/F control)

Setting Carrier frequency

◆ The higher the carrier frequency, the lower the motor acoustic noise. Unfortunately, it will result in greater leakage current and larger noises generated by the inverter.

◆ The higher the carrier frequency, the more energy dissipated, and the higher the temperature of the inverter.

◆ In case of a mechanical resonance occurring in a system within the inverter, 00-11(P.72) is helpful for improving the performance by adjusting its value.

Note: The optimum carrier frequency shall be 8 times greater than the target frequency.

Setting Carrier operation selection V/F

- Soft-PWM control is a control method that changes the motor noise from a metallic sound into an inoffensive, complex one.
- Motor noise modulation control is when the inverter varies its carrier frequency from time to time during the operation. The metal noises generated by the motor are not a single frequency. This function selection is to improve the high peak single frequency noises.
- This function is only valid under the V/F mode; i.e., it is effective when 00-21(P.300)=0.

5.1.7 Stop operation selection

➢ Select the inverter stop operation

Parameter	Name	Default	Setting Range	Content
00-13 P.71	Idling braking / DC braking	1	0	Idling braking
			1	DC braking
00-14 P.75	STOP/RESET function selection	1	0	Press STOP/RESET button and stop the motor only in PU and H2 (combined mode 2) mode
			1	Press STOP/RESET button and stop the motor in all mode.

Setting Idling braking / DC braking

- Idling braking (00-13(P.71)="0")

  After receiving the stop signal, the inverter stops output immediately, and the motor freely idling.

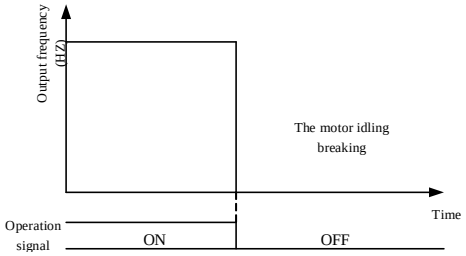

- DC braking (00-13(P.71)="1")

  After receiving the stop signal, the inverter decelerates according to the acceleration/deceleration curve until it stops completely.

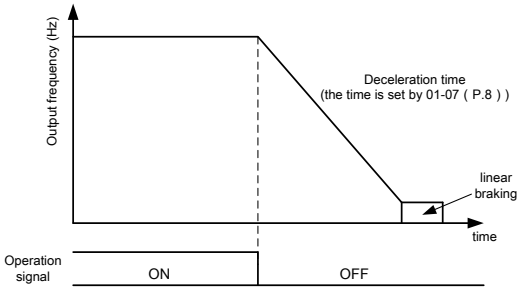

Setting STOP/RESET button function selection

- Press STOP/RESET button to stop during operation (00-14(P.75)="1")

  Note: **When running in non-PU and H2 modes, pressing the STOP/RESET button will display E0 and lock all functions of the keypad. Please follow the steps below to cancel this state.**

  1. If the start signal is from digital input terminal, it is necessary to cancel the digital input start signal given (Note1);

2. Press STOP RESET button for more than 1.0 second to remove E0 state.

◆ No matter in which setting, press STOP RESET button for more than 1.0 second to reset the inverter after the alarm occurs

Note: 1. In the programmed operation mode, it is not necessary to cancel the start signal.The inverter will run at the section where it stopped after reset)
2. After resetting the inverter, the values of the two relays of “electronic thermal relay” and “IGBT module thermal relay” will be set to zero.

5.1.8 Forward/reverse rotation prevention selection

➢ Set this parameter to limit the motor rotation to only one direction, and prevent reverse rotation fault resulting from the incorrect input of the start signal.

Parameter	Name	Default	Setting Range	Content
00-15 P.78	Forward/reverse rotation prevention selection	0	0	0: Forward rotation and reverse rotation are both permitted.
			1	1: Reverse rotation is prohibited (Sending reverse command refer to decelerate and stop the motor)
			2	2: Forward rotation is prohibited (Sending forward command refer to decelerate and stop the motor)
Note: It is valid to any start signals.				

5.1.9 Operation mode selection

➢ Select the operation mode of the inverter, and determine the source of start signal and target frequency.

Parameter	Name	Default	Setting Range	Content
00-16 P.79	Operation mode selection	0	0	0: “PU mode”, “external mode” and “Jog mode” are interchangeable
			1	1: “PU mode” and “JOG mode” are interchangeable
			2	2: “External mode” only
			3	3: “Communication mode” only
			4	4: “Combined mode 1”
			5	5: “Combined mode 2”
			6	6: “Combined mode 3”
			7	7: “Combined mode 4”
			8	8: “Combined mode 5”
			99999	99999: Second operation mode, run command is set by 00-18(P.109), target frequency is set by 00-17(P.97)
00-17 P.97	Second target frequency selection	0	0	0: Frequency set by keypad
			1	1: Frequency set by communication RS485
			2	2: Frequency set by analog signal
			3	3: Frequency set by communication card(optional)
			4	4: Reserve
			5	5: Frequency set by HDI pulse
00-18 P.109	Second start signal selection	0	0	0: Start signal given by keypad
			1	1: Start signal given by digital input terminal
			2	2: Start signal given by communication RS485
			3	3: Start signal given by communication card(optional)
00-19 P.35	Communication mode instruction selection	0	0	0: Start and frequency command is given by communication
			1	1: Start and frequency command is given by external terminal

Setting Operation mode selection

Please refer to section 4.2 for the detailed setting and usage.

Setting Communication mode instruction selection

When 00-16(P.79)=3, select communication mode:

1. If 00-19(P.35)=0, Start and frequency command is given by communication;
2. If 00-19(P.35)=1, Start and frequency command is given by external terminals.

5.1.10 Motor control mode selection

➢ Determine the control mode for the selected AC motor.

Parameter	Name	Default	Setting Range	Content
00-21 P.300	Motor control mode selection	0	0	Induction motor V/F control
			1	Reserve
			2	Induction motor simple vector control
			3	Induction motor sensor less vector control
			4	Reserve
			5	Reserve
			6	Synchronous motor without PG vector control
00-22 P.370	Second motor control mode selection	99999	0	Induction motor V/F control
			1	Reserve
			2	Induction motor simple vector control
			3	Induction motor sensor less vector control
			4	Reserve
			5	Reserve
			6	Synchronous motor without PG vector control
			99999	The second motor control mode is not selected

Setting Motor control mode

- Induction motor V/F control: user can design proportion of V/F as required and can control multiple motors simultaneously.
- Induction motor simple vector control: The frequency will be altered due to elevated voltage and increased compensatory motor load.
- Induction motor sensor less vector control: get the optimal control by auto-tuning the motor parameters.
- Synchronous motor PG vector control: get the optimal control by auto-tuning the motor parameters.

Note: 1.The motor capacity must be the same level or one level lower than the inverter capacity.

2. Sensorless vector control: Control performance can be enhanced by auto tuning. Before setting 00-21(P.300) =3, please set the motor parameters first, then do the auto tuning function to increase the precision of the control.
3. When 00-22(P.370) ≠ 99999, RT signal is ON, the second motor parameters05-22(P.332)~05-39(P.395) are valid, please refer to section 5.2.10 for the second motor parameter.
4. The RT mentioned in this paragraph is the function name of the "multi-function digital input terminal". For the function selection and function of the multi-function digital input terminal, please refer to 03-00~03-09(P.80~P.84、P.86、P.126~P.128、P.550); Please refer to section 3.5 for wiring.

5.1.11 Motor types selection

➢ Modify the applicable load type of the inverter.

Parameter	Name	Default	Setting Range	Content
00-23 P.186	Motor types selection	0	0	Normal Duty (ND), apply fans and pumps duty type
			1	Heavy Duty (HD), apply to other duty type.

Setting Motor types selection

◆ If you want to change to heavy duty setting (00-23(P.186)= 1), be sure to perform the following steps. After these steps are completed, the duty type will be successfully switched.

1. Set 00-23(P.186)=0;
2. Execute 00-02=3(P.998=1) to return to the default value;
3. Execute 00-02=2(P.997=1) reset function.

5.1.12 50/60Hz switch selection

➢ According to reigns with different power frequency and motor frequency, the related frequency default parameters can be selected as50Hz or 60Hz default value.

Parameter	Name	Default	Setting Range	Content
00-24 P.189	50/60Hz switch selection	0	0	0: 60Hz system default value for related parameters.
		1	1	1: 50Hz system default value for related parameters.

Setting 50/60Hz switch selection

◆ If you want to set the frequency related parameter to 60Hz system (00- 24(P.189)= 0), be sure to perform the following two steps.

1. Set 00-24(P.189)=0;
2. Set 00-02=3(P.998=1) return to the default value, at this point, frequency-related parameters of the inverter will be reset to 60Hz.

◆ The affected parameters are as follows:

Group	Parameter Number	Name
01-03	P.3	Base frequency
01-09	P.20	Acceleration / deceleration reference frequency
02-09	P.38	2-5 maximum operation frequency
02-21	P.39	4-5 maximum operation frequency
02-30	P.508	3-5 maximum operation frequency
02-51	P.55	analog output frequency display reference

Group	Parameter Number	Name
05-03	P.304	Motor rated voltage
05-04	P.305	Motor rated frequency
05-06	P.307	Motor rated rotation speed
06-03	P.66	Stall prevention operation reduction starting frequency
10-41	P.701	VF separated voltage value

5.1.13 Parameter mode setting

➢ Select “order number” or “parameter group” to display parameters.

Parameter	Name	Default	Setting Range	Content
00-25 P.990	Parameter mode setting	0	0	Parameter is displayed as “group mode”
			1	Parameter is displayed as “order number”

Display Parameter mode setting

◆ “Group mode” displaying

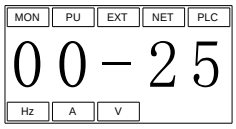

◆ “Order number” displaying

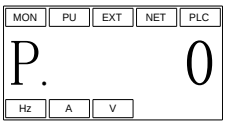

5.1.14 Expansion card type display

➢ This parameter is used to check the expansion card type, and cannot be modified.

Parameter	Name	Default	Setting Range	Content
00-26 P.125	Expansion card type	Read only	Read only	It is used to display the current expansion card type, for read only.

Read The current expansion card type

◆ The state of no card is all high level, that is, all bits are 1.

◆ The definition of each 00-26 (P.125) bit is as follows:

Weighted number	2^3	2^2	2^1	2^0
bit	bit3	bit2	bit1	bit0

◆ The values for all kinds of expansion cards are shown in the following table:

Expansion card type	Model	Expansion card
Communication expansion card	PD302	0 1 0 1
	DN301	1 0 0 1
	CP301	1 1 0 1
	EP301	0 0 1 1
	EC301	1 1 0 0
I/O Expansion card	EB362R	1 0 1 0
	EB308R	0 1 1 0

For example: Insert EP301, the read-out value of 00-26(P.125) is as follows:

$0\times 2^3 + 0\times 2^2 + 1\times 2^1 + 1\times 2^0 = 3$

Note: It will display alarm if the expansion card is loose after inserting. Please refer to 7.2 Appendix 2: Alarm code list.

5.2 Basic parameter group 01

Group	Parameter Number	Name	Setting Range	Default	Page
01-00	P.1	Maximum frequency	55K/45KF and types below: 0.00~01-02(P.18)Hz	120.00Hz	91
			75K/55KF and types above: 0.00~01-02(P.18)Hz	60.00Hz	
01-01	P.2	Minimum frequency	0 ~ 120.00Hz	0.00Hz	91
01-02	P.18	High-speed maximum ☐ frequency	01-00(P.1) ~ 650.00Hz	120.00Hz	91
01-03	P.3	Base frequency	50Hz system setting: 0 ~ 650.00Hz	50.00Hz	92
			60Hz system setting: 0 ~ 650.00Hz	60.00Hz	
01-04	P.19	Base voltage	0 ~ 1000.0V	99999	92
			99999: Change according to the input voltage		
01-05	P.29	Acceleration/deceleration curve selection	0: Linear acceleration /deceleration curve	0	93
			1: S pattern acceleration /deceleration curve 1		
			2: S pattern acceleration /deceleration curve 2		
			3: S pattern acceleration /deceleration curve 3		
01-06	P.7	Acceleration time	0 ~ 360.00s/0 ~ 3600.0s	5.00s	93
01-07	P.8	Deceleration time	5.5K/3.7KG~7.5K/5.5KG types: 0 ~ 360.00s/0 ~ 3600.0s	10.00s	93
			11K/7.5KG and types above: 0~360.00s/0 ~ 3600.0s	30.00s	
01-08	P.21	Acceleration/deceleration time increments	0: Time increment is 0.01s	0	93
			1: Time increment is 0.1s		
01-09	P.20	Acceleration / deceleration reference frequency	50Hz system setting: 1.00 ~ 650.00Hz	50.00Hz	93
			60Hz system setting: 1.00 ~ 650.00Hz	60.00Hz	
01-10	P.0	Torque boost	5.5K/3.7KG~7.5K/5.5KG types: 0 ~ 30.0%	3.0%	95
			11K/7.5KG~55K/45KG types: 0 ~ 30.0%	2.0%	
			75K/55KG and types above: 0 ~ 30.0%	1.0%	
01-11	P.13	Starting frequency	0 ~ 60.00Hz	0.50Hz	96
01-12	P.14	Load pattern selection	0: Applicable to constant torque loads(conveyor belt, etc.)	0	96
			1: Applicable to variable torque loads (fans and pumps, etc.)		
			2,3: Applicable to ascending / descending loads		
			4: Multipoint VF curve		
			5 ~ 13: Special two-point VF curve		
			14: V/F complete detached mode		
			15: V/F semidetached mode		
01-13	P.15	JOG frequency	0 ~ 650.00Hz	5.00Hz	99
01-14	P.16	JOG acceleration/ deceleration time	0 ~ 360.00s/0 ~ 3600.0s	0.50s	99
01-15	P.28	Output frequency filter time	0 ~ 1000ms	0ms	100
01-16	P.91	Frequency jump 1A	0 ~ 650.00Hz	99999	100
			99999: invalid		
01-17	P.92	Frequency jump 1B	0 ~ 650.00Hz	99999	100
			99999: invalid		
01-18	P.93	Frequency jump 2A	0 ~ 650.00Hz	99999	100
			99999: invalid		
01-19	P.94	Frequency jump 2B	0 ~ 650.00Hz	99999	100
			99999: invalid		
01-20	P.95	Frequency jump 3A	0 ~ 650.00Hz	99999	100
			99999: invalid		

Basic parameter group 01

Group	Parameter Number	Name	Setting Range	Default	Page
01-21	P.96	Frequency jump 3B	0 ~ 650.00Hz 99999: invalid	99999	100
01-22	P.44	Second acceleration☐ time	0 ~ 360.00s/0 ~ 3600.0s 99999: Not selected	99999	101
01-23	P.45	Second deceleration☐ time	0 ~ 360.00s/0 ~ 3600.0s 99999: Not selected	99999	101
01-24	P.46	Second torque boost	0 ~ 30.0% 99999: Not selected	99999	101
01-25	P.47	Second base frequency	0 ~ 650.00Hz 99999: Not selected	99999	101
01-26	P.98	Middle frequency 1	0 ~ 650.00Hz	3.00Hz	102
01-27	P.99	Middle voltage 1	0 ~ 100.0%	10.0%	102
01-28	P.162	Middle frequency 2	0 ~ 650.00Hz 99999: Not selected	99999	102
01-29	P.163	Middle voltage 2	0 ~ 100.0%	0.0%	102
01-30	P.164	Middle frequency 3	0 ~ 650.00Hz 99999: Not selected	99999	102
01-31	P.165	Middle voltage 3	0 ~ 100.0%	0.0%	102
01-32	P.166	Middle frequency 4	0 ~ 650.00Hz 99999: Not selected	99999	102
01-33	P.167	Middle voltage 4	0 ~ 100.0%	0.0%	102
01-34	P.168	Middle frequency 5	0 ~ 650.00Hz 99999: Not selected	99999	102
01-35	P.169	Middle voltage 5	0 ~ 100.0%	0.0%	102
01-36	P.255	S pattern time at the ☐ beginning of acceleration	0 ~ 25.00s/0 ~ 250.0s	0.20s	103
01-37	P.256	S pattern time at the end of acceleration	0 ~ 25.00s/0 ~ 250.0s 99999: Not selected	99999	103
01-38	P.257	S pattern time at the ☐ beginning of deceleration	0 ~ 25.00s/0 ~ 250.0s 99999: Not selected	99999	103
01-39	P.258	S pattern time at the end of acceleration	0 ~ 25.00s/0 ~ 250.0s 99999: Not selected	99999	103
01-40	P.219	Remote function acc/dec time selection	0: Use default acc/dec time(same as regular mode) 1 : Use second acc/dec time	0	105

5.2.1 Limiting the output frequency

➢ Output frequency can be limited. Fix the output frequency at the upper and lower limits.

Parameter	Name	Default	Setting Range	Content
01-00 P.1	Maximum frequency	120.00Hz	0.00 ~ 01-02(P.18)Hz	55K/45KG and types below
		60.00Hz		75K/55KG and types above:
01-01 P.2	Minimum frequency	0.00Hz	0 ~ 120.00Hz	Output minimum frequency
01-02 P.18	High-speed maximum frequency	120.00Hz	01-00(P.1) ~ 650.00Hz	Set when above 120Hz

Settin Maximum frequency, high-speed maximum frequency

◆ The “maximum frequency” and the “high-speed maximum frequency” are interrelated:

1. If the target upper limit frequency is set below 01-00(P.1), use 01-00(P.1) as the maximum frequency;
2. If the target upper limit frequency is set above 01-00(P.1), use 01-02(P.18) as the maximum frequency.

◆ If 01-00(P.1)< 01-01(P.2), the steady output frequency will be clamped to 01-00(P.1).

◆ When setting the target frequency in PU mode, the set frequency value cannot exceed the value of 01-00(P.1).

Setting Minimum frequency

◆ If the target frequency≤01-01(P.2), the steady output frequency equals to = 01-01(P.2).

◆ If 01-01(P.2)<target frequency≤01-00(P.1) (01-02(P.18)), the steady output frequency equals to target frequency.

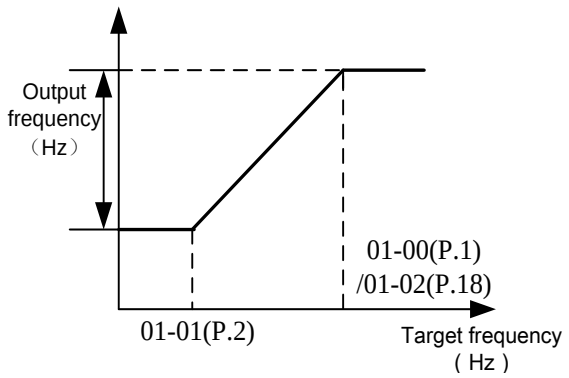

5.2.2 Base frequency, base voltage

➢ Use this function to adjust the inverter outputs (voltage, frequency) to match with the motor rating

Parameter	Name	Default	Setting Range	Content
01-03 P.3	Base frequency	50.00Hz	0.00 ~ 650.00Hz	50Hz system (00-24(P.189)=1)
		60.00Hz		60Hz system (00-24(P.189)=0)
01-04 P.19	Base voltage	99999	0 ~ 1000.0V	Set the base voltage according to the motor rating.
			99999	The base voltage is equal to the power source voltage.

Setting Base frequency

◆ Generally, 01-03(P.3) is set to the rated frequency of the motor..
When the frequency on the motor rating plate is only "50 Hz", make sure to set 01-03(P.3) to "50 Hz". When it is set to "60 Hz",the voltage will drop too much, causing insufficient torque. As a result, the inverter may trip due to overload.

◆ When the motor operation requires switching to a normal power supply, set the normal power supply frequency 01-03(P.3).

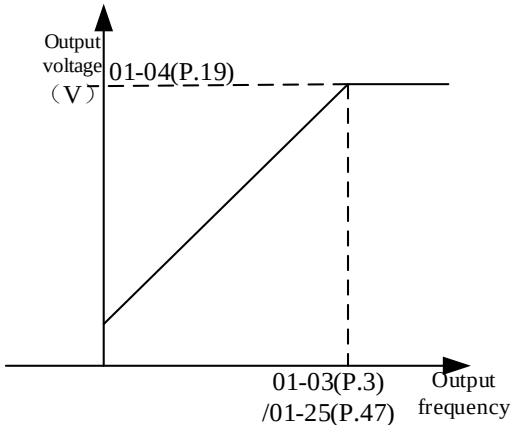

Note: For the second base frequency please refer to 5.2.10 the second function

Setting Base frequency voltage

◆ When the output frequency is lower than the base frequency, the output voltage of the inverter will increase as the output frequency increases; when the output frequency reaches the base frequency (01-03(P.3)), the output voltage will just reach the base voltage. If the output frequency exceeds the base frequency, it will continue to rise, and the output voltage will be fixed at the base voltage.

5.2.3 Acceleration/deceleration time setting

➢ Use this function to set motor acceleration/deceleration time

Parameter	Name	Default	Setting Range	Content
01-05 P.29	Acceleration/deceleration curve selection	0	0	Linear acceleration /deceleration curve
			1	S pattern acceleration /deceleration curve 1 (Note 1)
			2	S pattern acceleration /deceleration curve 2 (Note 2)
			3	S pattern acceleration /deceleration curve 3 (Note 3)
01-06 P.7	Acceleration time	20.00s	0 ~ 360.00s 0 ~ 3600.0s	
01-07 P.8	Deceleration time	10.00s	0 ~ 360.00s	5.5K/3.7KG~7.5K/5.5KG types
		30.00s	0 ~ 3600.0s	11K/7.5KG and types above
01-08 P.21	Acceleration/deceleration time increments	0	0	Time increment is 0.01s
			1	Time increment is 0.1s
01-09 P.20	Acceleration / deceleration reference frequency	50.00Hz	1.00 ~ 650.00Hz	50Hz system setting (00-24(P.189)=1)
		60.00Hz		60Hz system setting (00-24(P.189)=0)

Setting Acceleration/deceleration curve selection

◆ Linear acceleration /deceleration curve(01-05(P.29)=“0”)

An acceleration slope is formed by the combination of 01-06(P.7) and 01-09(P.20). A deceleration slope is formed by the combination of 01-07(P.8) and 01-09(P.20).

When the target frequency varies, it increases with the “acceleration slope” or decreases with the “deceleration slope” linearly. See the figure below:

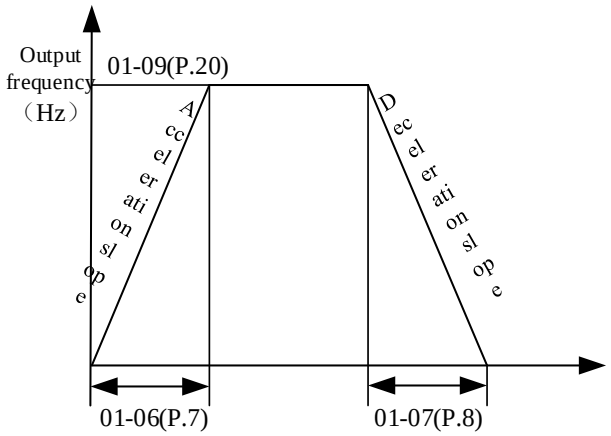

◆ S pattern acceleration /deceleration curve 1 (01-05(P.29)=“1”)

An acceleration curve is formed by the combination of 01-06(P.7) and 01-03(P.3). A deceleration curve is formed by the combination of 01-07(P.8) and 01-03(P.3).

The acceleration / deceleration curve has an S-shape change according to the “acceleration / deceleration slope”.

The S-shape equation between 0 and 01-03(P.3) is: $f = [1 - \cos(\frac{90° \times t}{P.7})] \times P.3$

The S-shape equation of 01-03(P.3) or above is: $t = \frac{4}{9} \times \frac{P.7}{(P.3)^2} \times f^2 + \frac{5}{9} \times P.7$

t = time; f = output frequency

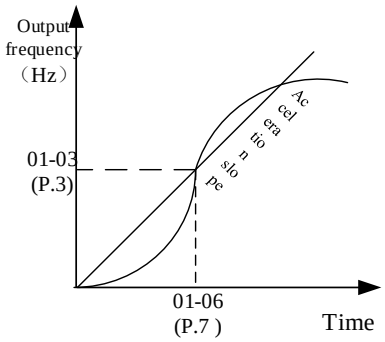

- S pattern acceleration /deceleration curve 2(01-05(P.29)=“2“)
  An acceleration curve is formed by the combination of 01-06(P.7) and 01-09(P.20). A deceleration curve is formed by the combination of 01-07(P.8) and 01-09(P.20).
  When the target frequency varies, the acceleration curve has an S-shape ascending according to the “acceleration slope”.The deceleration curve on the other hand has an S-shape deceleration according to the “deceleration slope”. As shown in the figure below, when the setting value of the inverter is adjusted from f0 to f2, an S-shape acceleration is undertaken once, and the time is 01-06(P.7)×(f2-f0)/01-09(P.20). Then if the frequency is set from f2 to f3, a second S-shape acceleration is experienced, and the time is 01- 06×(f3-f2)/01-09(P.20).

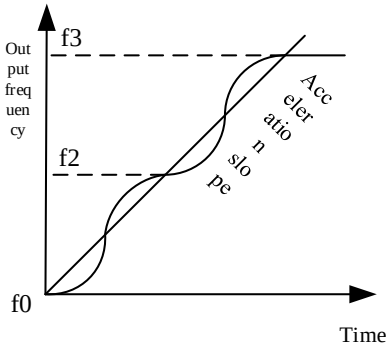

- S pattern acceleration /deceleration curve 3(01-05(P.29)=“3”)
  Please refer to 5.2.12 S pattern time setting.

Setting Acceleration/deceleration time increments

- When 01-08(P.21)=0, minimum acceleration / deceleration time (01-06(P.7), 01-07(P.8), 01-14(P.16), 01-22(P.44), 01-23(P.45), 04-35(P.111)~04-42(P.118), 10-36(P.276), 10-37(P.277))increment is 0.01s.
- When 01-08(P.21)=1, minimum acceleration / deceleration time (01-06(P.7), 01-07(P.8), 01-14(P.16), 01-22(P.44), 01-23(P.45), 04-35(P.111)~04-42(P.118), 10-36(P.276), 10-37(P.277)) increment is 0.1s.

Setting Acceleration / deceleration reference frequency

- When the output frequency of the inverter is accelerated from 0Hz to01-09(P.20), the required time is defined as “acceleration time”.
- When the output frequency of the inverter is decelerated from 0Hz to 01-09(P.20), the required time is defined as “deceleration time”.

Note:1. S pattern acceleration /deceleration curve 1 is used when acceleration/deceleration is required for a short time until a high-speed area equal to or higher than the base frequency, such as for the main shaft of the machine.
2. S pattern acceleration /deceleration curve 2 can effectively reduce motor vibration during the acceleration / deceleration, and thus prevent the belts and gears from broken.
3. S pattern acceleration /deceleration curve 3 is used to start the inverter gradually without impact.
4.Please refer to Section 5.2.10 The second function for the second acceleration/deceleration time.
5.When RT is “on”, the second function is valid.For the operation characteristics of the motor, please refer to Section 5.2.10. RT mentioned in this section is the function name of the “multi-function digital input terminal”. Please refer to 03-00~03-09(P.80~P.84、P.86、P.126~P.128、P.550) for the function selection of multi-function digital input terminal; please refer to section 3.5 for related wiring.

5.2.4 Torque boost V/F

- For an inverter controlled by V/F mode, when the motor starts up, the starting torque is usually insufficient since the output voltage of the inverter is low. In this case, the output voltage can be elevated by properly setting the torque boost (01-10(P.0)), and thus a better starting torque can be acquired.

Parameter	Name	Default	Setting Range	Content
01-10 P.0	Torque boost	3.0%	0 ~ 30.0%	5.5K/3.7KG ~ 7.5K/5.5KG types
		2.0%		11K/7.5KG ~ 55K/45KG types
		1.0%		75K/55KG and types above

Setting Torque boost

- If 01-10(P.0)=6% and 01-04(P.19)=220V, and when output frequency of the inverter is 0.2Hz, the output voltage is:

$$P.19 \times \left(\frac{100\% - P.0}{P.3} \times f + P.0 \right) = 220V \times \left(\frac{100\% - 6\%}{50Hz} \times 0.2Hz + 6\% \right) = 14.03V$$

- If RT is “on,” “the second torque boost” on 01-24(P.46) is valid (Note 2).

Note: 1.If the set value of 01-10(P.0) is too high, it will activate current inverter protection or fail to start.

2.Please refer to section 5.2.10 for the second torque boost.

3.RT mentioned in this section is the function name of the “multi-function digital input terminal”. Please refer to 03-00~03-09(P.80~P.84、P.86、P.126~P.128、P.550) for the function selection of multi-function digital input terminal; please refer to section 3.5 for related wiring.

5.2.5 Starting frequency

➢ When the motor starts up, the instantaneous output frequency of the inverter is called “starting frequency”.

Parameter	Name	Factory Value	Setting Range	Content
01-11 P.13	Starting frequency	0.50Hz	0 ~ 60.00Hz	---

Setting Starting frequency

◆ If the target frequency of the inverter is lower than the setting value of 01-11(P.13), the motor will not run. When the signal of the motor starts, the output frequency will go up from the value of 01-11(P.13).

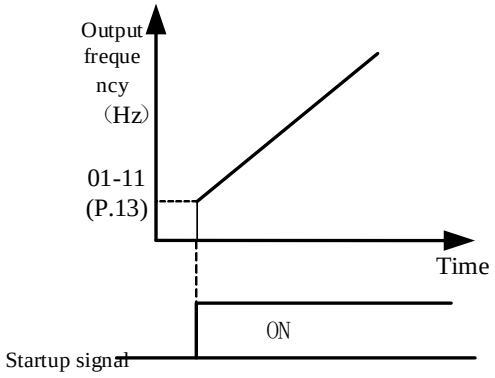

5.2.6 Load pattern selection V/F

➢ In V/F control, you can choose the best output characteristics for different applications and load.

Parameter	Name	Default	Setting Range	Content
01-12 P.14	Load pattern selection	0	0	Applicable to constant torque loads (conveyor belt, etc.,)
			1	Applicable to variable torque loads (fans and pumps, etc.)
			2、3	Applicable to ascending / descending loads
			4	Multipoint V/F curve
			5 ~ 13	Special two-point V/F curve
			14	V/F complete detached mode
			15	V/F semidetached mode

Setting Load pattern selection

◆ When 01-12(P.14) = 4, suppose that 01-04(P.19)=220V, 01-26(P.98)=5Hz, 01-27(P.99)=10%, when the inverter is running at5Hz, the output voltage equals to 01-04(P.19)×01-27(P.99) = 220V×10% = 22V.

◆ If RT is “on”, 01-24(P.46) “the second torque boost” is valid.

01-12(P.14)＝0

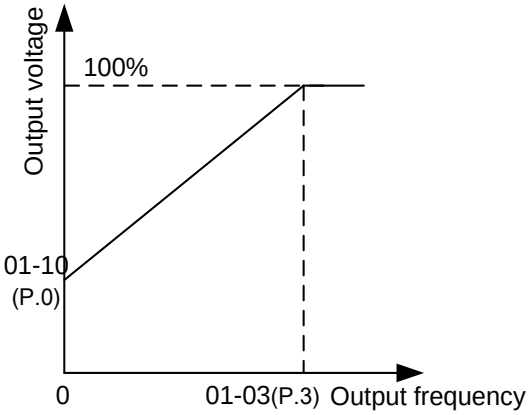

Applicable to constant torque loads (convey belt, etc.,)

01-12(P.14) = 1

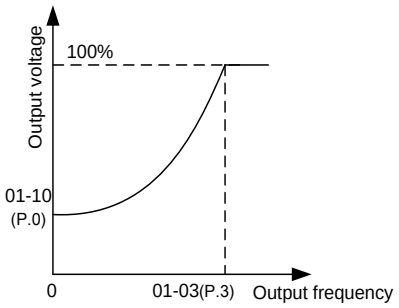

Applicable to variable torque loads

(Fans and pumps, etc.)

Curve equationof output voltage and output frequency is:

$$V=\frac{(\text{Base voltage-Base voltage*01-10(P..0))* Output frequency}^2}{\text{Base frequency}^2}+\text{Base voltage *(01-10(P.0))}$$

01-12(P.14)＝2

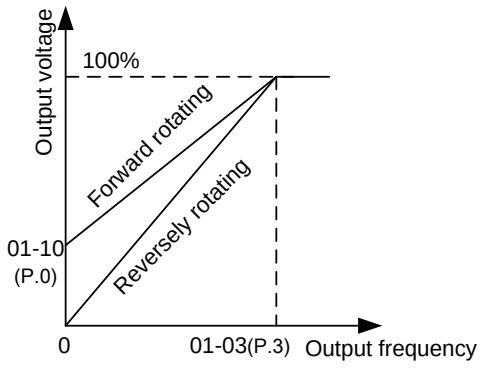

Ascending / descending loads

01-12(P.14)＝3

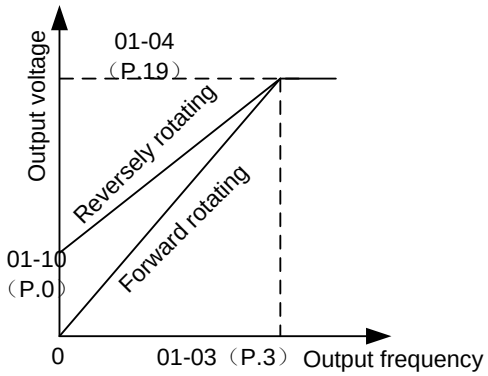

Ascending / descending loads

01-12(P.14)＝4

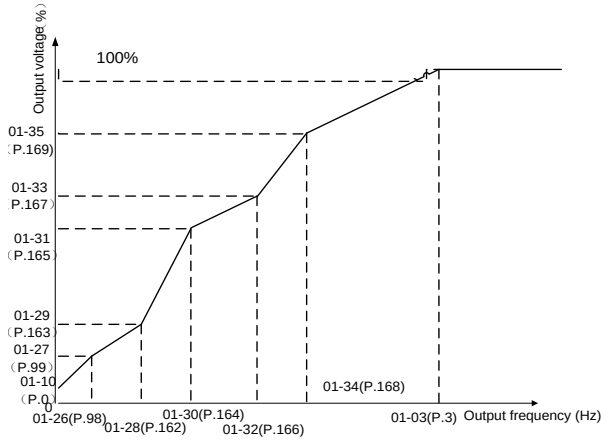

Determine whether the curve is high starting torque or decreasing torque according to the value of the parameter set in the figure. (Note 1).

01-12(P.14)= 5

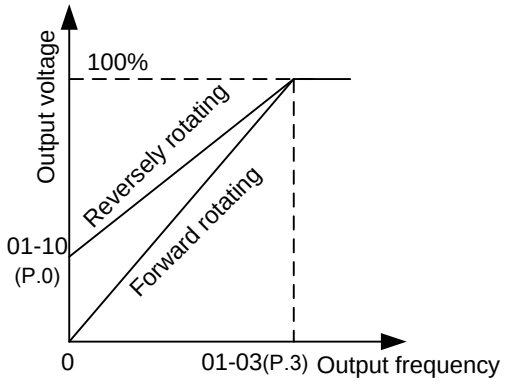

When 01-12(P.14) = 5, the value of A is 7.1% (Note 2).

01-12(P.14)＝6, 7, 8

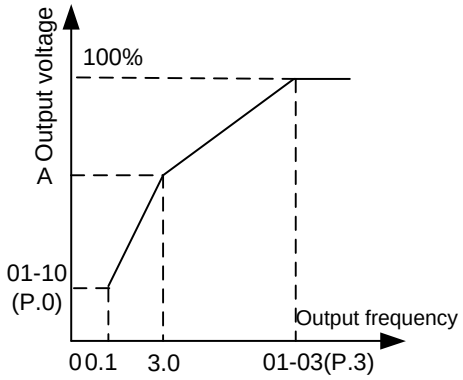

When 01-12(P.14)=6, the value of A is 8.7%. When 01-12(P.14)=7, the value of A is 10.4%. When 01-12(P.14)=8, the value of A is 12.0%. (Note 2)

01-12(P.14)＝ 9, 10

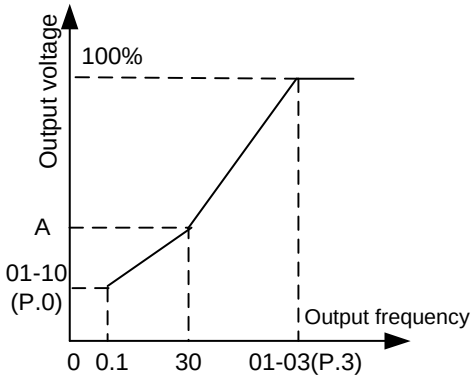

When 01-12(P.14)=9, the value of A is 20.0%. When 01-12(P.14)=10, the value of A is 25.0%. (Note 2)

01-12(P.14) = 11, 12, 13

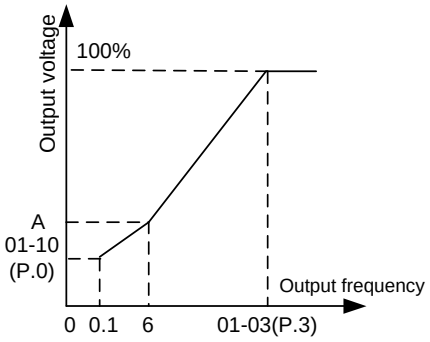

When 01-12(P.14) = 11, the value of A is 9.3%. When 01-12(P.14) = 12, the value of A is 12.7%. When 01-12(P.14) = 13, the value of A is 16.1%. (Note 2)

Note: 1.Referring to the diagrams above, set 01-26(P.98) and 01-27(P.99), if one point is needed.Set 01-26(P.98), 01-27(P.99), 01-28(P.162) and 01-29(P.163) if two points are needed.01-26(P.98), 01-27(P.99), 01-28(P.162), 01-29(P.162), 01-30(P.164) and 01-31(P.162) if three points are needed.

2. If you set 01-12(P.14) between 5 and 13, the curve will be invalid when 01-10(P.0) is larger than the point A, where point A equals to 01-10(P.0).

- VF complete separation(01-12(P.14)="14")

  In this mode, the output frequency and output voltage of the AC drive are independent.The output frequency is determined by the frequency command source (00-16(P.79)), and the output voltage is determined by voltage source for V/F separation (10-40(P.700)). For the details, please refer to Section 5.11.13 V/F complete separation.

- V/F half separation(01-12(P.14)="15")

  In this mode, V and F are proportional and the proportional relationship can be set by external analog terminal or HDI terminal.The relationship between V and F are also related to the rated motor voltage and rated motor frequency.

  In this mode,the relationship between V and F is:V/F=2*X*(motor rated voltage)/ (motor rated frequency).

  X is set by external analog terminal function, and the range is 0-100%.

Note: VF curve separation is suitable for all kinds of variable frequency power supply occasions, but the user must be careful when setting and adjusting parameters, inappropriate settings may cause damage to the machine.

5.2.7 JOG running

➢ The frequency and acceleration/deceleration time for JOG running can be set. JOG running can be used for conveyor positioning, test run, etc.

Parameter	Name	Default	Setting Range	Content
01-13 P.15	JOG frequency	5.00Hz	0 ~ 650.00Hz	---
01-14 P.16	JOG acceleration/ deceleration time	0.50s	0 ~ 360.00s/ 0 ~ 3600.0s	01-08(P.21)=0/ 01-08(P.21)=1

Setting JOG running

◆ In JOG mode, the output frequency is the set value of 01-13(P.15), and the acceleration / deceleration time is the set value of 01-14(P.16).

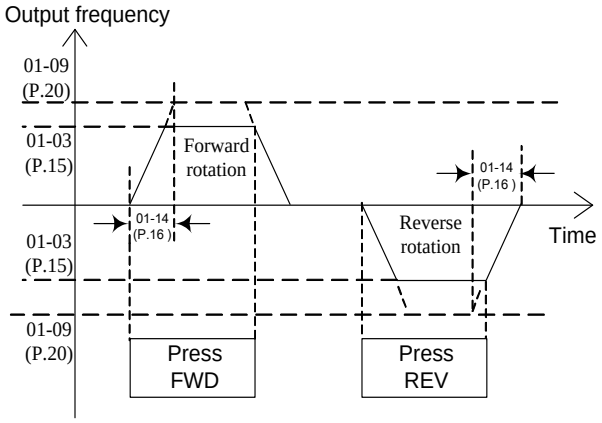

Note: Please refer to Section 4.3.3 for how to enter the JOG mode.

5.2.8 Output frequency filter time

➢ When Output frequency filter time is set, the inverter can filter out the output frequency to reduce machine vibration upon high-frequency and low-frequency is switched.

Parameter	Name	Default	Setting Range	Content
01-15 P.28	Output frequency filter time	0ms	0 ~ 1000ms	---

Setting Output frequency filter time

◆ The bigger the 01-15(P.28) is, the better the filtering effect is.But the corresponding response delay will also increase.

◆ If 01-15(P.28) is set to 0, the filtering function is invalid.

5.2.9 Frequency jump

➢ When it is desired to avoid resonance attributable to the natural frequency of a mechanical system, these parameters allows skipping the frequency point at which resonance occurs.

Parameter	Name	Default	Setting Range	Content
01-16 P.91	Frequency jump 1A	99999	0 ~ 650.00Hz	---
			99999	Invalid
01-17 P.92	Frequency jump 1B	99999	0 ~ 650.00Hz	---
			99999	Invalid
01-18 P.93	Frequency jump 2A	99999	0 ~ 650.00Hz	---
			99999	Invalid
01-19 P.94	Frequency jump 2B	99999	0 ~ 650.00Hz	---
			99999	Invalid
01-20 P.95	Frequency jump 3A	99999	0 ~ 650.00Hz	---
			99999	Invalid
01-21 P.96	Frequency jump 3B	99999	0 ~ 650.00Hz	---
			99999	Invalid

Setting Frequency jump

◆ To avoid system's mechanical resonance frequency when running the motor, the inverter provides three sets of jump frequencies, namely, 01-16(P.91) and 01-17(P.92) (the first set), 01-18(P.93) and 01-19(P.94) (the second set), 01-20(P.95) and 01-21(P.96) (the third set).

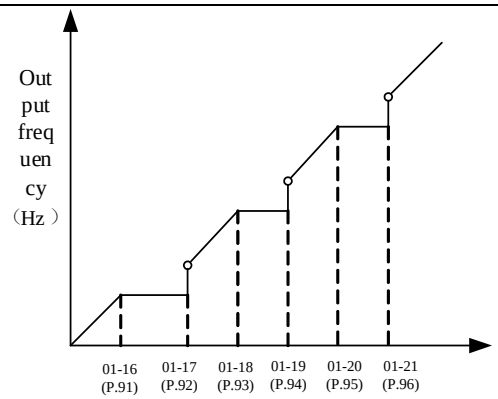

- For example: assuming 01-16(P.91)=45 and 01-17(P.92)=50;
  If the target frequency≤45Hz, then the steady output frequency=the target frequency.
  If 45Hz≤target frequency < 50Hz, then the steady output frequency=45Hz.
  If the target frequency≥50Hz, then the steady output frequency=the target frequency.

Note: 1.During the acceleration / deceleration period, the output frequency of the inverter will still pass through the jump frequency.
2.When 01-16(P.91)=99999 or 01-17(P.92)=99999, the first set of frequency jump is invalid.
When 01-18(P.93)=99999 or 01-19(P.94)=99999, the second set of frequency jump is invalid.
When 01-20(P.95)=99999 or 01-21(P.96)=99999, the third set of frequency jump is invalid.

5.2.10 The second function

- It is appropriate for the parameters when the RT signal is ON.

Parameter	Name	Default	Setting Range	Content
01-22 P.44	The second acceleration time	99999	0 ~ 360.00s/0 ~ 3600.0s	01-08(P.21)=0/ 01-08(P.21)=1
			99999	Not selected
01-23 P.45	The second deceleration time	99999	0 ~ 360.00s/0 ~ 3600.0s	01-08(P.21)=0/ 01-08(P.21)=1
			99999	Not selected
01-24 P.46	The second torque boost	99999	0 ~ 30.0%	---
			99999	Not selected
01-25 P.47	The second base frequency	99999	0 ~ 650.00Hz	---
			99999	Not selected

Setting The second function

- When 01-08(P.21)=0, minimum acceleration / deceleration time (01-22(P.44), 01-23(P.45)) increment is 0.01s.
- When 01-08(P.21)=1, minimum acceleration / deceleration time (01-22(P.44), 01-23(P.45)) increment is 0.1s.
- When RT is “on”, the second function is valid.For the operation characteristics of the motor, please refer to the following second function setting.

  If 01-22(P.44)≠99999 and 01-23(P.45)=99999, when RT is “on”, the acceleration /deceleration time is the “set value of 01-22”.

  If 01-22(P.44)≠99999 and 01-24(P.46)=99999, when RT is “on”,the torque boost is the “set value of 01-10(P.0)”.
  If 01-22(P.44)≠99999 and01-24(P.46)≠99999, when RT is “on”,the torque boost is the “set value of01-24(P.46)”.

  If 01-22(P.44)≠99999 and 01-25(P.47)=99999, when RT is “on”,the base frequency is the “set value of 01-03(P.3)”.
  If 01-22(P.44)≠99999 and01-25(P.47)≠99999, when RT is “on”, the base frequency is the “set value of 01-25(P.47)”.

Note: RT mentioned here is the function name of “multi-function digital input terminal”. Please refer to 03-00~03-09(P.80~P.84、P.86、P.126~P.128、P.550) for the function selection of multi-function digital input terminal; please refer to section 3.5 for related wiring.

5.2.11 Middle frequency, output voltage of middle frequency V/F

➢ Parameters can be set when using a special motor, especially adjusting the motor torque.

Parameter	Name	Default	Setting Range	Content
01-26 P.98	Middle frequency 1	3.00Hz	0 ~ 650.00Hz	---
01-27 P.99	Middle voltage 1	10.0%	0 ~ 100.0%	---
01-28 P.162	Middle frequency 2	99999	0 ~ 650.00Hz	---
			99999	Not selected
01-29 P.163	Middle voltage 2	0.0%	0 ~ 100.0%	---
01-30 P.164	Middle frequency 3	99999	0 ~ 650.00Hz	---
			99999	Not selected
01-31 P.165	Middle voltage 3	0.0%	0 ~ 100.0%	---
01-32 P.166	Middle frequency 4	99999	0 ~ 650.00Hz	---
			99999	Not selected
01-33 P.167	Middle voltage 4	0.0%	0 ~ 100.0%	---
01-34 P.168	Middle frequency 5	99999	0 ~ 650.00Hz	---
			99999	Not selected
01-35 P.169	Middle voltage 5	0.0%	0 ~ 100.0%	---

Setting Middle frequency, output voltage of middle frequency

◆ Please refer to the description on 01-12(P.14)=4 in section 5.2.6 load pattern selection.

5.2.12 S pattern time

➢ It is used to set the acceleration time of S pattern acceleration/deceleration.

Parameter	Name	Default	Setting Range	Content
01-36 P.255	S pattern time at the beginning of acceleration	0.20s	0 ~ 25.00s/ 0 ~ 250.0s	01-08(P.21)=0/ 01-08(P.21)=1
01-37 P.256	S pattern time at the end of acceleration	99999	0 ~ 25.00s/ 0 ~ 250.0s	01-08(P.21)=0/ 01-08(P.21)=1
			99999	Not selected
01-38 P.257	S pattern time at the beginning of deceleration	99999	0 ~ 25.00s/ 0 ~ 250.0s	01-08(P.21)=0/ 01-08(P.21)=1
			99999	Not selected
01-39 P.258	S pattern time at the end of deceleration	99999	0 ~ 25.00s/ 0 ~ 250.0s	01-08(P.21)=0/ 01-08(P.21)=1
			99999	Not selected

Settin S pattern time

◆ When 01-05(P.29)=3, is “S pattern acceleration /deceleration curve 3”

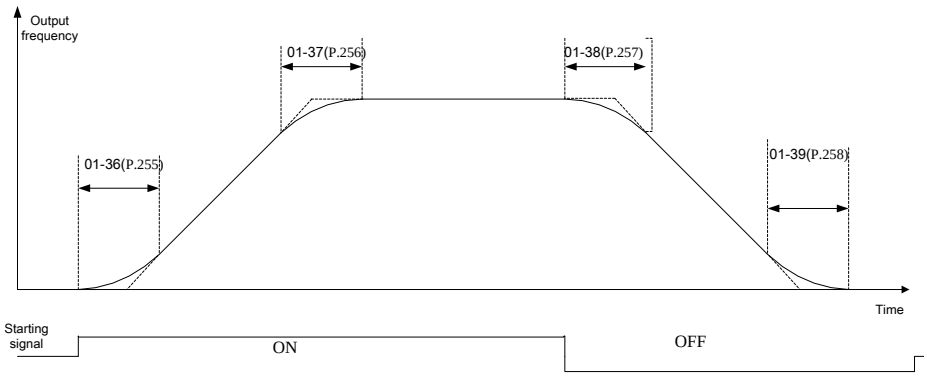

1) The parameters 01-36(P.255), 01-37(P.256), 01-38(P.257) and 01-39(P.258) are used to start the inverter gradually without impact. And varying degrees of S pattern acceleration/deceleration curve are adjusted by the values. When the S pattern acceleration/deceleration curve is started, the inverter will accelerate/decelerate with different speed according to the primary acceleration/deceleration time.
2) When S pattern acceleration/deceleration curve 3 is selected, the acceleration/ deceleration time will be longer, as follows.
3) When the selected acceleration time (01-06(P.7) or 01-22(P.44))≥01-36(P.255) and 01-37(P.256), the actual acceleration time is as follows:
   The actual acceleration time = the selected acceleration time + (01-36(P.255) + 01-37(P.256))/ 2
4) When the selected deceleration time (01-07(P.8) or 01-23(P.45))≥01-38(P.257) and 01-39(P.258), the actual deceleration time is as follows:
   The actual deceleration time = the selected deceleration time + (01-38(P.257) + 01-39(P.257))/ 2

Example: when the parameters are initial value (60 Hz system), the actual acceleration time from 0Hz to 60Hz in accordance with S pattern acceleration/deceleration curve 3 is as follows:

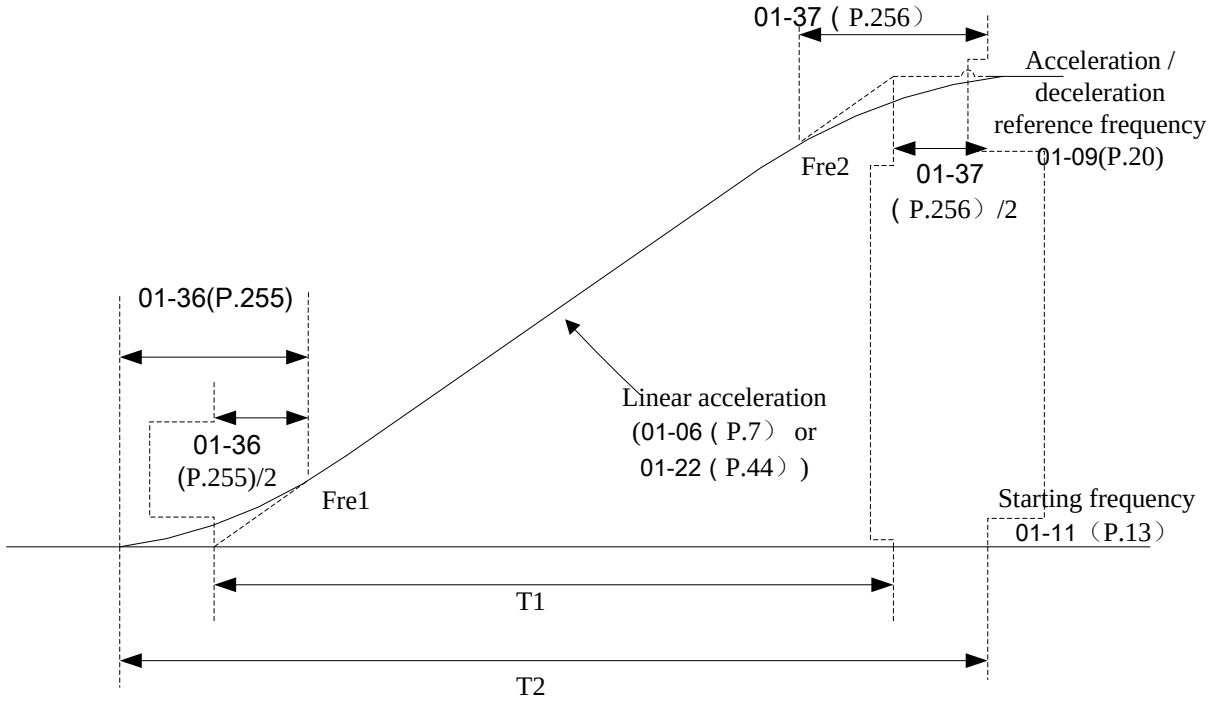

The acceleration time being set T1 = (01-09(P.20) - 01-11(P.13)) * 01-06(P.7) / 01-09(P.20)

The actual acceleration time T2 = T1 + (01-36(P.255) + 01-37(P.256)) * (01-09(P.20) - 01-11(P.13)) / 2 / 01-09(P.20)

So T1 = (60 - 0.5) * 5 / 60 = 4.96s (the actual acceleration time of linear acceleration)

The actual acceleration time T2 = 4.96 + (0.2 + 0.2) * (60 - 0.5) / 2 / 60 = 5.16s

Note: All calculations of acceleration/deceleration time are based on 01-09(P.20).

5.2.13 Remote function acc/dec time selection

➢ Under remote control select the acc/dec time where frequency is modified by RM RH terminal

Parameter	Name	Default	Setting range	Content
01-40 P.219	Remote function acc/dec time selection	0	0	Use default acc/dec time(same as regular mode)
			1	Use second acc/dec time

Setting Remote function acc/dec time selection

◆ When 01-40(P.219) = 0，remote control frequency acc/dec time is current time(same as regular mode).

◆ When 01-40(P.219) = 1，

If 01-22(P.44)≠ 99999，01-23(P.45)= 99999，remote control frequency acc/dec time is the set value of 「01-22(P.44)」。

If 01-22(P.44)≠ 99999，01-23(P.45)≠ 99999，remote control frequency acc time is remote control frequency acc.,and 「01-23(P.45)」for dec. time.

If 01-22(P.44)= 99999，remote control frequency acc/dec time is current time(same as regular mode).

5.3 Analog input and output parameter group 02

Group	Parameter Number	Name	Setting Range	Default	Page
02-00	P.500	Function selection of terminal 2-5	0: Non-function 1: Frequency reference 2: Reserve 3: PID target value 4: PID feedback signal 5~ 10: Reserve 11 : PTC 12 : PT100 13: VF detached function	1	110
02-01	P.501	Function selection of terminal 4-5	Same as 02-00(P.500)	1	110
02-02	P.504	Function selection of terminal 3-5	Same as 02-00(P.500)	0	110
02-03	P.503	Function of terminal HDI	Same as 02-00(P.500)	0	110
02-04	P.54	Function of terminal AM1 output	0: Output frequency, the frequency display reference 02-51 (P.55) is 100%. 1: Output frequency, the frequency display reference 02-52 (P.56) is 100%. 2: Output DC bus voltage, the OV level is 100%. 3: Output temperature rising accumulation rate of inverter, the NTC level is 100%. 4: Output inverter electronic thermal rate, the electronic thermal relay running (06-00(P.9)≠0) or the electronic thermal relay of inverter's IGBT module running(06-00(P.9)=0) is 100%. 5: Target frequency, the frequency display reference 02-51(P.55) is 100%. 6: Fixed level output, voltage or current output level is set by 02-54(P.541)/02-53(P.539). 7: Output voltage, inverter rated voltage is 100%. 8: Excitation current, the motor rated current is 100%. (Valid only when 00-21(P.300) or 00-22(P.370) is set to 3~6). 9: Output torque, two times motor rated torque is 100%. (Valid only when 00-21(P.300) or 00-22(P.370) is set o 3~6). 10: Output power, two times motor rated power is 100%. 11: High-speed pulse, 100.00KHz is 100%.	0	111

Group	Parameter Number	Name	Setting Range	Default	Page
02-04	P.54	Function of terminal AM1 output	12: Motor running speed to show that reference 02 - 51 (P.55) is 100%	0	111
			13: PLC analog output		
02-05	P.537	Function of terminal AM1 output	6: Steady level output, voltage or current output level is set by 02-53(P.539).	0	111
			0~5, 7~13: Same as 02-04(P.54).		
02-06	P.185	Proportion linkage gain	0 ~ 100%	0%	111
02-07	P.240	Auxiliary frequency	0: No auxiliary frequency function is available.	0	112
			1: operation frequency = basic frequency + auxiliary frequency (given by 2-5 terminal)		
			2: operation frequency = basic frequency + auxiliary frequency (given by 4-5 terminal)		
			3: operation frequency = basic frequency - auxiliary frequency (given by 2-5 terminal)		
			4: operation frequency = basic frequency - auxiliary frequency (given by4-5 terminal)		
			5: operation frequency = given by terminal 2-5 as proportion linkage signal		
			6: operation frequency = given by terminal 4-5 as proportion linkage signal		
			7: operation frequency = given by the terminal 3-5 as the proportion linkage signal		
			8: operation frequency = basic frequency + auxiliary frequency (given by 3-5 terminal)		
			9: operation frequency = basic frequency - auxiliary frequency (given by 3-5 terminal)		
02-08	P.73	2-5 signal selection	0: Effective range of signal sampling is 0 ~ 5V.	1	113
			1: Effective range of signal sampling is 0 ~ 10V.		
			2:Effective range of signal sampling is 0 ~ - 5V.		
			3: Effective range of signal sampling is 0 ~ -10V.		
			4: Effective range of signal sampling is -5 ~ +5V.		
			5: Effective range of signal sampling is -10 ~ +10V.		
02-09	P.38	2-5 maximum operation frequency	50Hz system: 1.00 ~ 650.00Hz	50.00Hz	113
			60Hz system: 1.00 ~ 650.00Hz	60.00Hz	
02-10	P.60	2-5 filter time	0 ~ 2000ms	30ms	113
02-11	P.139	Bias rate of 2-5 voltage signal	-100.0%~100.0%	0.0%	113
02-12	P.192	Minimum input positive voltage of 2-5	0 ~ 10.00V	0.00V	113
02-13	P.193	Maximum input positive voltage of 2-5	0 ~ 10.00V	10.00V	113
02-14	P.194	Percentage correspond to minimum positive voltage of terminal 2-5	-100.0% ~ 100.0%	0.0%	113
02-15	P.195	Percentage correspond to maximum positive voltage of terminal 2-5	-100.0% ~ 100.0%	100.0%	113
02-16	P.512	Minimum input negative voltage of 2-5	0 ~ 10.00V	0.00V	113
02-17	P.513	Maximum input negative voltage of 2-5	0 ~ 10.00V	0.00V	113
02-18	P.510	Percentage correspond to minimum negative voltage of terminal 2-5	-100.0% ~ 100.0%	0.0%	113
02-19	P.511	Percentage correspond to maximum negative voltage of terminal 2-5	-100.0% ~ 100.0%	0.0%	113
02-20	P.17	4-5 signal selection	0: Effective range of signal sampling is 4~20mA.	0	119
			1: Effective range of signal sampling is 0 ~ 10V.		
			2: Effective range of signal sampling is 0 ~ 5V.		
02-21	P.39	Maximum operation frequency of terminal 4-5	50Hz system: 1.00 ~ 650.00Hz	50.00Hz	119
			60Hz system: 1.00 ~ 650.00Hz	60.00Hz	
02-22	P.528	4-5 filter time	0 ~ 2000ms	30ms	119

Analog input and output parameter group 02

Group	Parameter Number	Name	Setting Range	Default	Page
02-23	P.505	Bias rate of 4-5 current/voltage signal	-100.0% ~ 100.0%	0.0%	119
02-24	P.184	4-5 disconnection selection	0: No disconnection selection 1: Decelerate to 0Hz, Multi-function digital output terminal will set off alarm. 2: Inverter will stop immediately, and keypad will display “AEr” alarm. 3: Inverter will run continuously according to the frequency reference before disconnection. Multi-function digital output terminal will set off alarm.	0	119
02-25	P.198	Minimum input current/voltage of terminal 4-5	0 ~ 20.00mA	4.00mA	119
02-26	P.199	Maximum input current/voltage of terminal 4-5	0 ~ 20.00mA	20.00mA	119
02-27	P.196	Percentage corresponding to minimum input current/voltage of terminal 4-5	-100.0% ~ 100.0%	0.0%	119
02-28	P.197	Percentage corresponding to maximum input current/voltage of terminal 4-5	-100.0% ~ 100.0%	100.0%	119
02-29	P.531	3-5 signal selection	0: Effective range of signal sampling is 4~20mA. 1: Effective range of signal sampling is 0~10V. 2: Effective range of signal sampling is 0 ~ 5V.	1	121
02-30	P.508	Maximum operation frequency of terminal 3-5	50Hz system: 1.00 ~ 650.00Hz 60Hz system: 1.00 ~ 650.00Hz	50.00Hz 60.00Hz	121
02-31	P.527	3-5 filter time	0 ~ 2000ms	30ms	121
02-32	P.507	Bias rate of 3-5 voltage signal	-100.0% ~ 100.0%	0.0%	121
02-33	P.545	3-5 disconnection selection	0: No disconnection selection 1: Decelerate to 0Hz; Multi-function digital output terminal will set off alarm. 2: Inverter will stop immediately, and keypad will display “AEr” alarm. 3: Inverter will run continuously according to frequency reference before the disconnection. Multi-function digital output terminal will set off alarm.	0	121
02-34	P.548	Minimum input current/voltage of terminal 3-5	0 ~ 10.00V	0.00V	121
02-35	P.549	Maximum input current/voltage of terminal 3-5	0 ~ 10.00V	10.00V	121
02-36	P.546	Percentage corresponding to minimum input current/voltage of terminal 3-5	-100.0% ~ 100.0%	0.0%	121
02-37	P.547	Percentage corresponding to maximum input current/voltage of terminal 3-5	-100.0% ~ 100.0%	100.0%	121
02-38	P.526	HDI filter time	0 ~ 2000ms	10ms	122
02-39	P.524	HDI input minimum frequency	0 ~ 100.00kHz	0.00kHz	122
02-40	P.525	HDI input maximum frequency	0 ~ 100.00kHz	100.00kHz	122
02-41	P.522	Percentage corresponding to HDI input minimum frequency	-100.0% ~ 100.0%	0.0%	122
02-42	P.523	Percentage corresponding to HDI input maximum frequency	-100.0% ~ 100.0%	100.0%	122
02-43	P.74	HDO frequency multiplication coefficient	0: Select FM function as output function of terminal HDO. 1 ~ 9000: Select square-wave pulse which is 02-43(P.74) times of running frequency as terminal output.	0	123

Group	Parameter Number	Name	Setting Range	Default	Page
02-44	P.543	FM output function selection	0: Output frequency, frequency display reference 02-51(P.55) is 100%.	0	123
			1: Output current, current monitoring reference 02-52(P.56) is 100%.		
			2: Output DC bus voltage, OV level is 100%.		
			3: Output temperature rising accumulation rate of inverter, the NTC level is 100%.		
			4: Output inverter electronic thermal rate: The electronic thermal relay running (when 06-00(P.9)≠0) or the electronic thermal relay of inverter's IGBT module running (when 06-00(P.9)=0) is 100%		
			5: Target frequency, frequency display reference02-51 (P.55) is 100%.		
			6: Fixed voltage output, voltage output level is set by 02-54 (P.541).		
			7: Output voltage, inverter rated voltage is 100%		
			8: Excitation current, motor rated current is100%. (Valid only when 00-21(P.300) or00-22(P.370) is set to 3~6)		
			9: Output torque, two times motor rated torque is 100%. (Valid only when 00-21(P.300) or 00-22(P.370) is set o 3~6)		
			10: Output power, two times motor rated power is 100%.		
			11: High-speed pulse, 100.00KHz is 100%.		
			12: Motor running speed, to show the reference 02 - 51 (P.55) is 100%		
02-45	P.64	AM1 output signal selection	0: output 0~10V voltage across AM1-5.	0	124
			1: Reserve		
			2: output 0~20mA current across AM1-5.		
			3: output 4~20mA current across AM1-5.		
02-46	P.191	AM1 output gain	0 ~ 150.00%	100.00%	124
02-47	P.190	AM1 output bias	0 ~ 150.00%	0.00%	124
02-48	P.538	AM1 output signal selection	Same as 02-45(P.64)	0	125
02-49	P.536	AM1 output gain	0 ~ 150.00%	100.00%	125
02-50	P.535	AM2 output bias	0 ~ 150.00%	0.00%	125
02-51	P.55	Frequency display reference at analog output	50Hz system: 0.00 ~ 650.00Hz	50.00Hz	126
			60Hz system: 0.00 ~ 650.00Hz	60.00Hz	
02-52	P.56	Current monitoring reference at analog output	0~500.00A: Types below Frame G	According to type	126
			0~5000.0A: Frame G and types above		
02-53	P.539	AM2 fixed output level	0 ~ 100.0%	0.0%	126
02-54	P.541	AM1/FM fixed output level	0 ~ 100.0%	0.0%	126
02-55	P.592	PT100 voltage level 1	0 ~ 10.00V	5.00V	127
02-56	P.593	PT100 voltage level 2	0 ~ 10.00V	7.00V	127
02-57	P.594	PT100 level 1starting frequency	0 ~ 650.00Hz	0.00Hz	127
02-58	P.595	Starting PT100 level1 delay time	0 ~ 6000s	60s	127
02-59	P.187	FM calibration parameter	0 ~ 9998	450	127

5.3.1 Function selection of analog terminal and HDI terminal

➢ Select the input function of 2, 4, 3, HDI terminals

Parameter	Name	Default	Setting Range	Content
02-00 P.500	Function selection of terminal 2-5	1	0	Non-function
			1	Frequency command
			2	Reserve
			3	PID target value
			4	PID feedback signal
			5~10	Reserve
			11	PTC
			12	PT100
			13	VF detached function
02-01 P.501	Function selection of terminal 4-5	1	Same as 02-00(P.500)	Same as 02-00(P.500)
02-02 P.504	Function selection of terminal 3-5	0	Same as 02-00(P.500)	Same as 02-00(P.500)
02-03 P.503	Function of terminal HDI	0	Same as 02-00(P.500)	Same as 02-00(P.500)

Setting Input function selection

◆ When frequency reference is selected, 0 ~ ±10V/4~20mA corresponds to 0~ maximum output frequency setting.

Note: 1. The default priority of terminal function selection is 2-5 > 4-5 >3-5 > HDI, so if terminal 3-5 is set as frequency reference, 02-00(P.500) and 02-01(P.501) should be set to 0.

5.3.2 Function selection of analog output terminal AM

➢ Set the number of monitoring items to be output from AM analog

Parameter	Name	Default	Setting Range	Content
02-04 P.54	Function of terminal AM1 output	0	0	Output frequency to show that reference 02 - 51 (P.55) is 100%
			1	Output current to show reference 02 - 52 (P.56) is 100%.
			2	Output DC bus voltage, the OV level is 100%.
			3	Output the temperature rising accumulation rate of inverter, the NTC level is 100%.
			4	Output the electronic thermal accumulation rate of the inverter, the electronic thermal relay running (06-00(P.9)≠0) or the electronic thermal relay of the inverter's IGBT module running (06-00(P.9)=0) is 100%.
			5	Target frequency, the frequency display reference 02-51(P.55) is 100%.
			6	Fixed level output, voltage or current output level is set by 02-54(P.541).
			7	Output voltage, inverter rated voltage is 100%.
			8	Excitation current, the motor rated current is 100%.(Valid only when 00-21(P.300) or 00-22(P.370) is set to 3~6).
			9	Output torque, two times motor rated torque is 100%.(Valid only when 00-21(P.300) or 00-22(P.370) is set o 3~6)
			10	Output power, two times motor rated power is 100%.
			11	The high-speed pulse, 100.00KHz is 100%.
			12	Motor running speed to show that reference 02 - 51 (P.55) is 100%.
			13	PLC analog output.
02-05 P.537	Function of terminal AM2 output	0	0 ~ 13	6: Steady level output, voltage or current output level is set by 02-53(P.539). 0~5, 7~13: Same as 02-04(P.54)

Setting Usage of analog output terminal AM

◆ For terminal AM voltage/current calibration, please refer to calibration parameter in section 5.3.11 selection and handling of output terminal AM1.

5.3.3 Proportion linkage gain

➢ This function is used to multiply setting frequency by external analog input terminal.When many inverters run proportionally, the reference frequency from the master inverter to the slave inverter can be fine-tuned effectively with this function.

Parameter	Name	Default	Setting Range	Content
02-06 P.185	Proportion linkage gain	0%	0 ~ 100%	---

Setting Proportion linkage gain

◆ When operation frequency is smaller than 01-01(P.2), operation frequency is equal to the lower limit frequency 01-01(P.2). When operation frequency is larger than 01-00(P.1),operation frequency is equal to the upper limit frequency 01-00(P.1).

◆ After multiplying the setting frequency by 02-06(P.185) value, add and subtract can be performed as follows:
For example: When the setting frequency is 50Hz, 02-06(P.185)=50% and the external analog input signal is 0~10V.

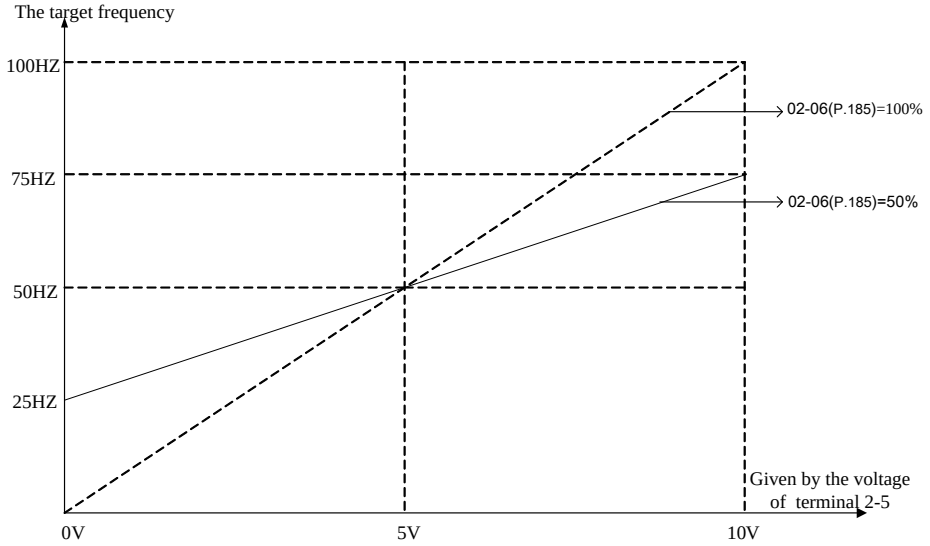

In the above figure, when 0V is given, the target frequency is 50Hz - (50Hz × 50%) = 25Hz;

when 5V is given, the target frequency is 50Hz - (50Hz × 0%) = 50Hz;

when 10V is given, the target frequency is 50Hz + (50Hz × 50%) = 75Hz.

Note: 1. For proportional linkage signal input, please refer to the description of parameter 02-07 (P.240)..
2. When external 4-5 analog (voltage/current) signal as the proportional linkage signal input terminal, please refer to parameter 02-20(P.17); for the setting of external analog signal frequency range, please refer to parameter 02-09(P.38), 02-21(P.39), 02-30(P.508). 02-20(P.17), 02-08(P.73), 02-29(P.531).

5.3.4 Auxiliary frequency selection

- The frequency can be adjusted and synthesized flexibly to meet the different control requirements of the application site .

Parameter	Name	Default	Setting Range	Content
02-07 P.240	Auxiliary frequency selection	0	0	No auxiliary frequency function .
			1	operation frequency = basic frequency + auxiliary frequency (given by 2-5 terminal)
			2	operation frequency = basic frequency + auxiliary frequency (given by 4-5 terminal)
			3	operation frequency = basic frequency - auxiliary frequency (given by 2-5 terminal)
			4	operation frequency = basic frequency - auxiliary frequency (given by 4-5 terminal)
			5	Operation frequency = given by terminal 2-5 as proportion linkage signal
			6	Operation frequency = given by terminal 4-5 as proportion linkage signal
			7	Operation frequency = given by terminal 3-5 as proportion linkage signal
			8	Operation frequency = basic frequency + auxiliary frequency (given by 3-5 terminal)
			9	Operation frequency = basic frequency - auxiliary frequency (given by 3-5 terminal)

Setting Auxiliary frequency selection

- When operation frequency is smaller than 01-01(P.2), operation frequency is equal to the lower limit frequency 01-01(P.2). When operation frequency is larger than 01-00(P.1), operation frequency is equal to the upper limit frequency 01-00(P.1).

Note:1.The primary frequency is set by keypad, communication or multi-speed combination.
2. For proportional linkage signals, please refer to the description of parameter 02-06(P.185).
3. When external 4-5 analog (voltage/current) signal is used as the proportional linkage signal input terminal, please refer to parameter 02-20(P.17); for the setting of external analog signal frequency range, please refer to parameter 02-09(P.38), 02-21(P.39), 02-30(P.508). 02-20(P.17), 02-08(P.73), 02-29(P.531).

5.3.5 Selection and processing of terminal 2-5 input

- Select the signal specifications, frequency compensation function, and input signal polarity etc. through the terminal 2-5 input.

Parameter	Name	Default	Setting Range	Content
02-08 P.73	2-5 signal selection	1	0	Effective range of signal sampling is 0~5V.
			1	Effective range of signal sampling is 0~10V.
			2	Effective range of signal sampling is 0 ~ - 5V.
			3	Effective range of signal sampling is 0~-10V.
			4	Effective range of signal sampling is -5~+5V.
			5	Effective range of signal sampling is -10~+10V.
02-09 P.38	2-5 maximum operation frequency	50.00Hz	1.00 ~ 650.00Hz	50Hz system(00-24(P.189)=1)
		60.00Hz		60Hz system(00-24(P.189)=0)
02-10 P.60	2-5 filter time	30ms	0 ~ 2000ms	---
02-11 P.139	Bias rate of 2-5 voltage signal	0.0%	-100.0%~100.0 %	---
02-12 P.192	Minimum input positive voltage of 2-5	0.00V	0 ~ 10.00V	---
02-13 P.193	Maximum input positive voltage of 2-5	10.00V	0 ~ 10.00V	---
02-14 P.194	Percentage correspond to minimum positive voltage of terminal 2-5	0.0%	-100.0% ~ 100.0%	---
02-15 P.195	Percentage correspond to maximum positive voltage of terminal 2-5	100.0%	-100.0% ~ 100.0%	---
02-16 P.512	Minimum input negative voltage of 2-5	0.00V	0 ~ 10.00V	---
02-17 P.513	Maximum input negative voltage of 2-5	0.00V	0 ~ 10.00V	---
02-18 P.510	Percentage correspond to minimum negative voltage of terminal 2-5	0.0%	-100.0% ~ 100.0%	---
02-19 P.511	Percentage correspond to maximum negative voltage of terminal 2-5	0.0%	-100.0% ~ 100.0%	---

Setting 2-5 signal selection, 2-5 maximum operation frequency

- The setting value of 02-09(P.38) is the target frequency value of the inverter when the input signal of terminal 2-5 is 5V (10V).
- Example 1: This example is the most commonly used adjustment method. It is used when the inverter is in “external mode", “combined mode 2”or “combined mode 4”, and frequency command is given by terminal 2-5.

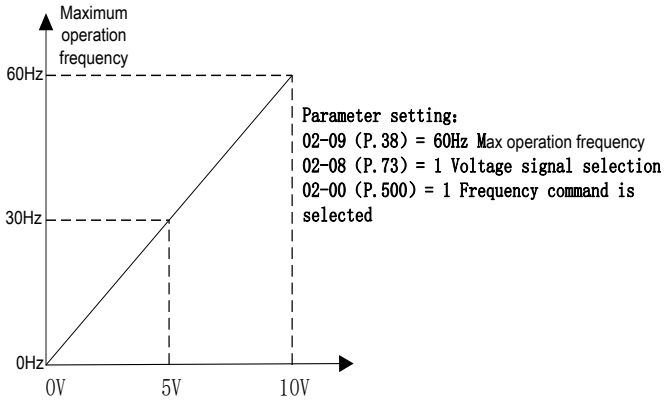

- 2-5 terminal can be connected to a negative voltage, but the value of 02-08(P.73) needs to be changed. The frequency algorithm is the same as positive voltage, and its running direction is unchanged.

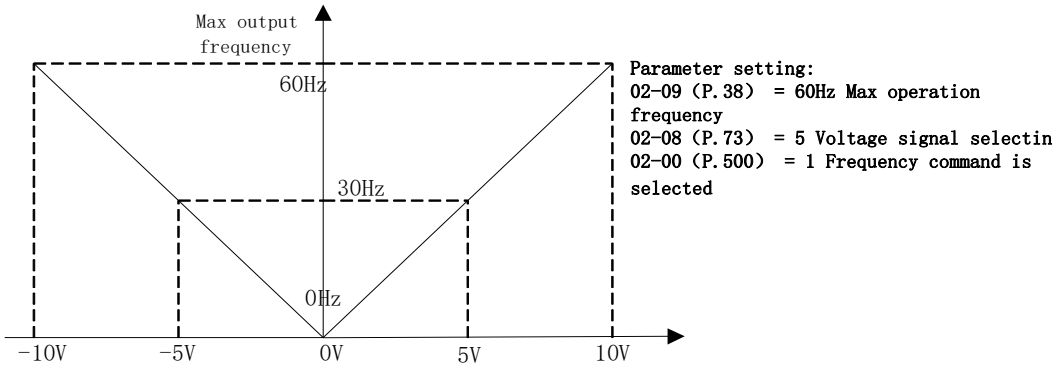

Note: 1. In “External mode", “combined mode 2” or “combined mode 4”, the target frequency of the inverter will be determined by the signal between 3-5/2-5/4-5/HDI terminal if RH, RM, RL and REX are all “off.” (the default priority is 2-5>4-5>3-5> HDI, please refer to 02-00(P.500), 02-01(P.501), 02-02(P.504), 02-03(P.503).

2. The functional names of RH, RM, RL, REX, AU, RT and RUN mentioned in this paragraph are "multi-function digital input terminals". For the function selection and function of multi-function digital input terminal, please refer to 03-00~03-09(P.80~P.84、P.86、P.126~P.128、P.550) ; For more information on wiring, please refer to Section 3.5.

3. Selecting the sampling range of the voltage signal from the 2 - 5 terminal with 02-08(P.73) will affect the correlation value of the input signal parameter group of the 5.3.5 section 2 - 5 terminal.

Setting 2-5 input signal processing

- The parameters above define the relationship between analog input voltage and set value represented by analog input. When the analog input voltage exceeds maximum or minimum range of the set value, the excess will be calculated as the maximum and minimum inputs.
- There are two setting sequences when setting maximum and minimum percentage:

1) If the user wants to adjust the size of the analog input to correspond to a certain proportional relationship, it is necessary to adjust the analog input and then set the corresponding proportional parameter. At this time, the inverter will calculate it by itself, and there is no need to set the voltage parameter (refer to Example 1.1).

2) If the user skips adjusting the analog input to set the proportional relationship, the proportional parameter need to be set first, and then set the voltage parameter (refer to example 1.2).

Example 1.1: User adjusts analog input voltage to minimum value A and sets parameter 02-14(P.194); adjusts input voltage to maximum value B again, and sets parameter 02-15(P.195).As shown below

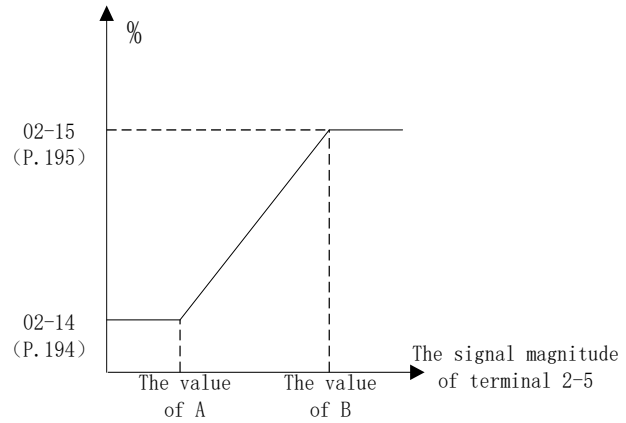

Example 1.2: Set 02-14(P.194) and 02-15(P.195) value, then set 02-12(P.192) and 02-13(P.193). Figure is shown as follows:

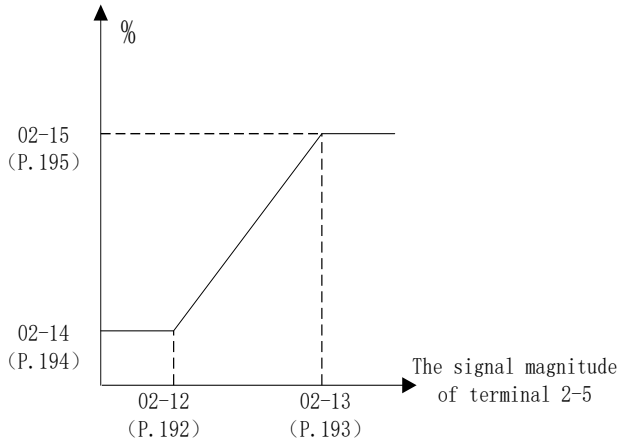

If the 02-00(P.500) function is selected as 1, 2-5 terminal analog input corresponds to frequency function, that is, the ratio calculated according to the above figure multiplied by 02-09(P.38) is the actual frequency input value (offset 02-11(P.139) = 0)

◆ Negative voltage setting can be referenced to positive voltage setting (as described above).

Example 2: This example is the most commonly used method of adjustment. It is used when the inverter is in “external mode", “combined mode 2”or “combined mode 4”, and the frequency is set by terminal 2-5.

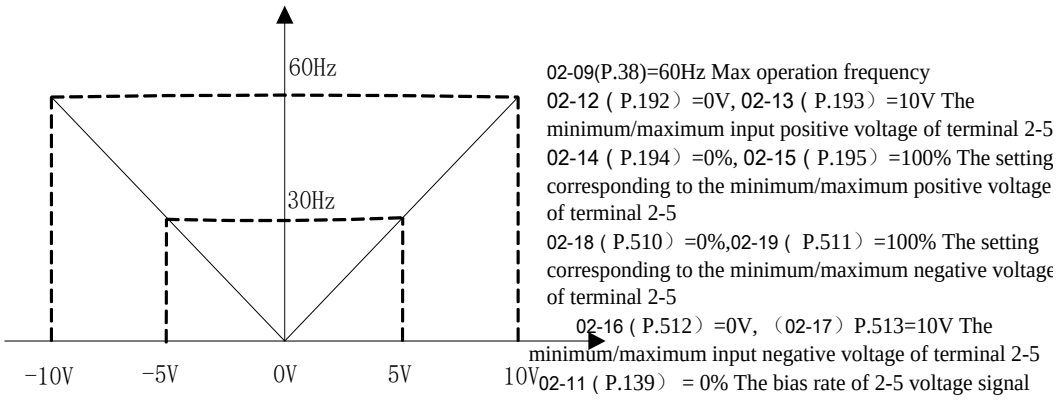

Example 3: This example is for users who need the motor to run at 10Hz when the potentiometer is turned to the left end. All frequencies above 10Hz can still be adjusted by the user freely.

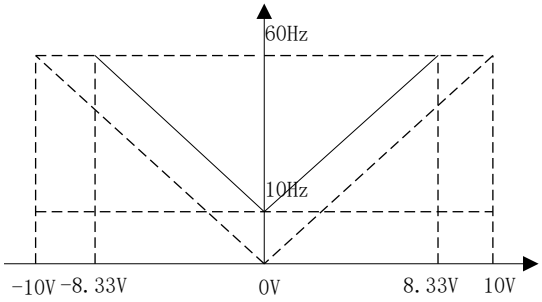

02-09 (P.38）=60Hz Max operation frequency
02-12 (P.192）=0V, 02-13 (P.193）=8.33V The minimum/maximum input positive voltage of terminal 2-5
02-14 (P.194）=16.7%, 02-15 (P.195）=100% The setting corresponding to the minimum/maximum positive voltage of terminal 2-5
02-18(P.510）=16.7%, 02-19 (P.511）=100% The setting corresponding to the minimum/maximum negative voltage of terminal 2-5
02-16 (P.512）=0V, 02-17 (P.513）=8.33V The minimum/maximum input negative voltage of terminal 2-5
02-14 (P.194） = 02-18(P.510） = 10Hz / 60Hz * 100
02-13 (P.193）= 02-19 (P.511）= 10V * (100.0 － 02-14 (P.194）) / 100

Example 4: This example is also frequently used by the industry. The setting of potentiometer can be fully utilized in the whole field and improve the flexibility.

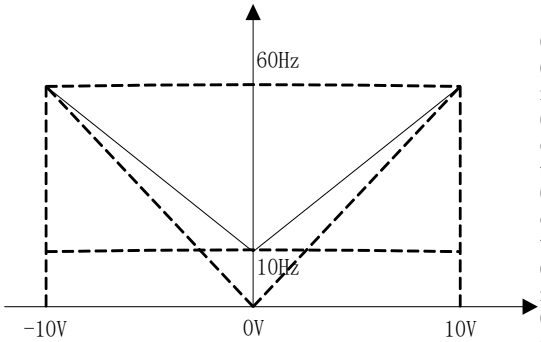

02-09 (P.38）=60Hz Max operation frequency
02-12（P.192）=0V,02-13（ P.193)=10V The minimum/maximum input positive voltage of terminal 2-5
02-14 (P.194）=16.7%, 02-15(P.195)=100% The setting corresponding to the minimum/maximum positive voltage of terminal 2-5
02-18(P.510)=16.7%, 02-19(P.511)=100% The setting corresponding to the minimum/maximum negative voltage of terminal 2-5
02-16(P.512）=0V,02-17（ P.513）=10V The minimum/maximum input negative voltage of terminal 2-5
02-11(P.139) = 0% The bias rate of 2-5 voltage signal
02-14（P.194) =02-15(P.510) = 10Hz / 60Hz * 100

Example 5: This example uses 0~5V to set the frequency.

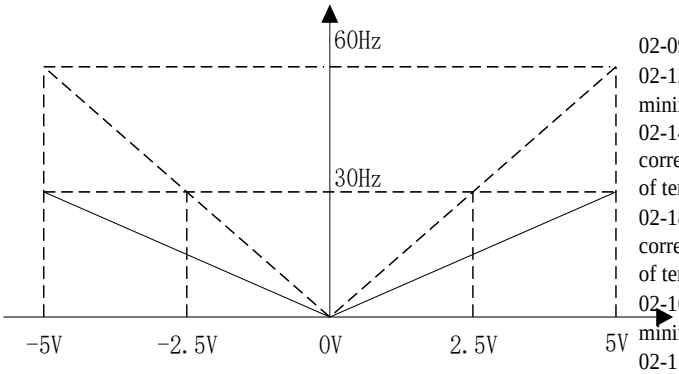

02-09（P.38）=60Hz Max operation frequency
02-12（P.1920=0V, 02-13(P.193)=5V The minimum/maximum input positive voltage of terminal 2-5
02-14(P.194)=0%, 02-15(P.195)=50% The setting corresponding to the minimum/maximum positive voltage of terminal 2-5
02-18(P.510）=0%, 02-19（P.511）=50% The setting corresponding to the minimum/maximum negative voltage of terminal 2-5
02-16(P.512）=0V,02-17(P.513)=5V The minimum/maximum input negative voltage of terminal 2-5
02-11(P.139) = 0% The bias rate of 2-5 voltage signal

Example 6: This example is recommended to avoid using the signal below 1V to set the operating frequency of the inverter in harsh environment, which can greatly avoid the interference of noise.

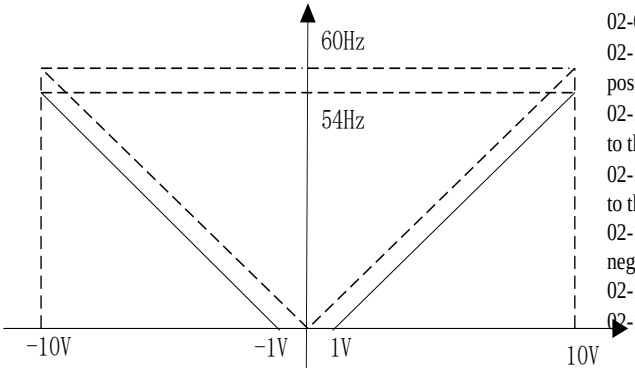

02-09（P.380=60Hz Max operation frequency
02-12(P.192)=1V, 02-13(P.193）=10V The minimum/maximum input positive voltage of terminal 2-5
02-14（P.194）=0%,02-15（ P.1950=90% The setting corresponding to the minimum/maximum positive voltage of terminal 2-5
02-18(P.510）=0%,02-19（ P.511）=90% The setting corresponding to the minimum/maximum negative voltage of terminal 2-5
02-16(P.512)=1V, 02-17(P.513)=10V The minimum/maximum input negative voltage of terminal 2-5
02-11(P.139) = 0% The bias rate of 2-5 voltage signal
02-15(P.195) = 02-19(P.511) = 100.0 － (1V / 10V) * 100

Example 7: This example is an extension of Example 6. This kind of application is extremely extensive, the user can apply flexibly.

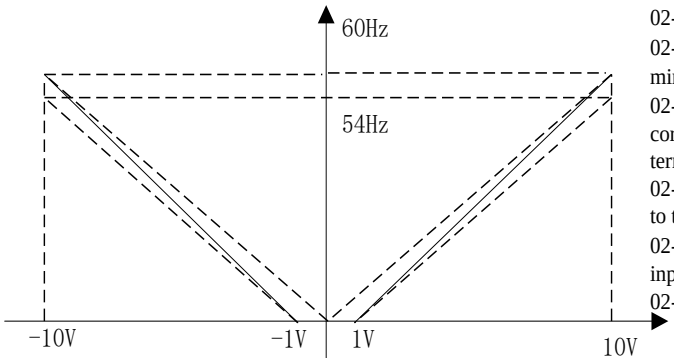

02-09（P.38）=60Hz Max operation frequency
02-12（P.192）=1V,02-13（ P.193）=10V The minimum/maximum input positive voltage of terminal 2-5
02-14（P.1940=0%,02-15(P.195)=100% The setting corresponding to the minimum/maximum positive voltage of terminal 2-5
02-18(P.510)=0%,02-19(P.511)=100% The setting corresponding to the minimum/maximum negative voltage of terminal 2-5
02-16(P.512)=1V, 02-17(P.513）=10V The minimum/maximum input negative voltage of terminal 2-5
02-11(P.139) = 0% The bias rate of 2-5 voltage signal

Example 8: This example is an application of inverse slope setting. The industry often uses sensors for pressure, temperature or flow control. Some of the sensors output a 10V signal at high voltage or high flow. This signal acts as a reference for the AC motor drive to decelerate or to stop. The setup presented in Example 8 can satisfy this type of application.

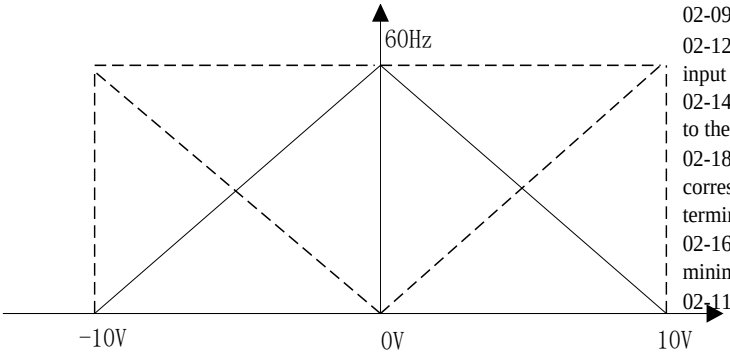

02-09（P.38）=60Hz Max operation frequency
02-12（P.192）=0V,02-13(P.193)=10V The minimum/maximum input positive voltage of terminal 2-5
02-14(P.194)=100%, 02-15(P.195)=0% The setting corresponding to the minimum/maximum positive voltage of terminal 2-5
02-18(P.510)=100%, 02-19（P.511）=0% The setting corresponding to the minimum/maximum negative voltage of terminal 2-5
02-16（P.512）=0V, 02-17（P.513）=10V The minimum/maximum input negative voltage of terminal 2-5
02-11（P.139） = 0% The bias rate of 2-5 voltage signal

Example 9: This example integrates all potentiometer setting methods. Together with forward and reverse rotation, it fits in the system easily for complicated applications.

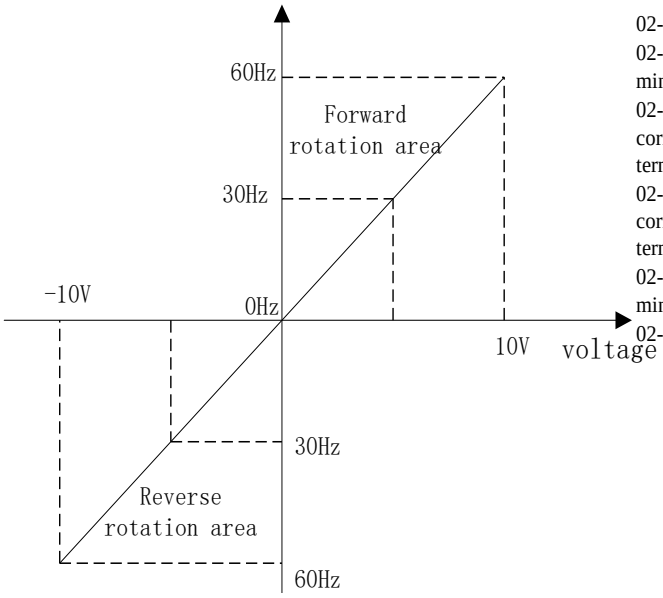

02-09（P.38）=60Hz Max operation frequency
02-12（P.192）=0V, 02-13（P.193）=10V The minimum/maximum input positive voltage of terminal 2-5
02-14（P.194）=0%, 02-15（P.195）=100% The setting corresponding to the minimum/maximum positive voltage of terminal 2-5
02-18（P.510）=0%, 02-19（P.511）=-100% The setting corresponding to the minimum/maximum negative voltage of terminal 2-5
02-16（P.512）=0V, 02-17（P.513）=10V The minimum/maximum input negative voltage of terminal 2-5
02-11（P.139） = 0% The bias rate of 2-5 voltage signal

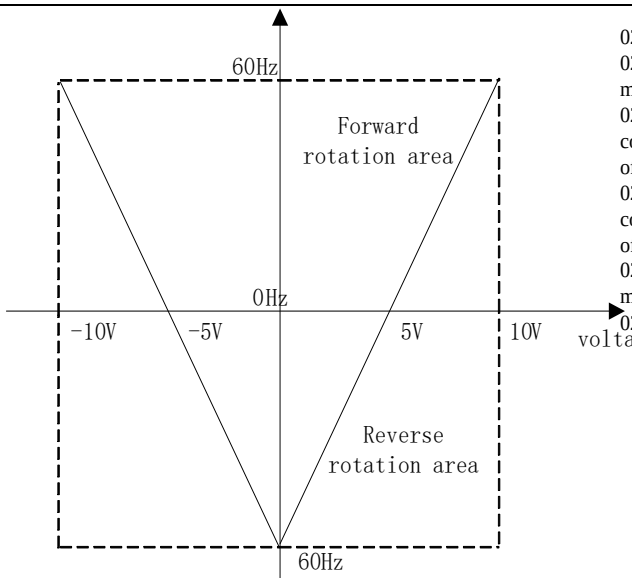

02-09（P.38)=60Hz Max operation frequency
02-12(P.192)=0V, 02-13(P.193)=10V The minimum/maximum input positive voltage of terminal 2-5
02-14(P.194)=-100%,02-15(P.195)=100% The setting corresponding to the minimum/maximum positive voltage of terminal 2-5
02-18(P.510)=-100%, 02-19(P.511)=100% The setting corresponding to the minimum/maximum negative voltage of terminal 2-5
02-16(P.512)=0V,02-17(P.513)=10V The minimum/maximum input negative voltage of terminal 2-5
02-11(P.139) = 0% The bias rate of 2-5 voltage signal

Example 10: This example is the application with bias voltage. The bias voltage is set by 02-11(P.139).When 02-11(P.139)=0%, there is no bias voltage; When 02-11(P.139)>0%, there is positive bias voltage; When 02-11(P.139)<0%, there is negative voltage.

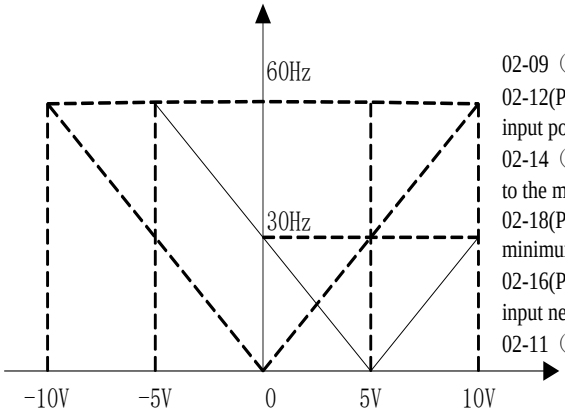

02-09（P.38)=60Hz Max operation frequency
02-12(P.192）=0V, 02-13（P.193）=10V The minimum/maximum input positive voltage of terminal 2-5
02-14（P.194）=0%, 02-15（P.195）=100% The setting corresponding to the minimum/maximum positive voltage of terminal 2-5
02-18(P.510)=0%, 02-19(P.511)=100% The setting corresponding to the minimum/maximum negative voltage of terminal 2-5
02-16(P.512）=0V, 02-17（P.513）=10V The minimum/maximum input negative voltage of terminal 2-5
02-11（P.139） = 50% The bias rate of 2-5 voltage signal

Note: 1. The above is only an example of 02-00(P.500) = 1. and the same applies when 02-00(P.500) is another non-zero value. For details, refer to the definition of 02-00(P.500).
2. Selecting the voltage signal sampling range of the 2-5 terminal with 02-08(P.73) will affect the correlation value of the input signal parameter group of the 2-5 terminal..

5.3.6 Selection and processing of terminal 4-5 input

➢ Select the signal specification, frequency compensation function, etc., of terminal 4-5 input.

Parameter	Name	Default	Setting Range	Content
02-20 P.17	4-5 signal selection	0	0	Effective range of signal sampling is 4~20mA.
			1	Effective range of signal sampling is 0~10V.
			2	Effective range of signal sampling is 0~5V.
02-21 P.39	4-5 maximum operation frequency	50.00Hz	1.00 ~ 650.00Hz	50Hz system(00-24(P.189)=1)
		60.00Hz		60Hz system(00-24(P.189)=0)
02-22 P.528	4-5 filter time	30ms	0 ~ 2000ms	---
02-23 P.505	The bias rate of 4-5 current/voltage signal	0.0%	-100.0% ~ 100.0%	---
02-24 P.184	4-5 disconnection selection	0	0	No disconnection selection
			1	Decelerate to 0Hz, Multi-function digital output terminal will set off alarm.
			2	Inverter will stop immediately, and keypad will display “AEr” alarm.
			3	Inverter will run continuously according to the frequency command before disconnection. Multi-function digital output terminal will set off alarm.
02-25 P.198	Minimum input current/voltage of terminal 4-5	4.00mA	0 ~ 20.00mA	---
02-26 P.199	Maximum input current/voltage of terminal 4-5	20.00mA	0 ~ 20.00mA	---
02-27 P.196	Percentage corresponding to minimum input current/voltage of terminal 4-5	0.0%	-100.0% ~ 100.0%	---
02-28 P.197	Percentage corresponding to maximum input current/voltage of terminal 4-5	100.0%	-100.0% ~ 100.0%	---

Setting Selection and processing of terminal 4-5 input

◆ Signal selection of terminal 4-5 input and maximum operation frequency of terminal 4-5

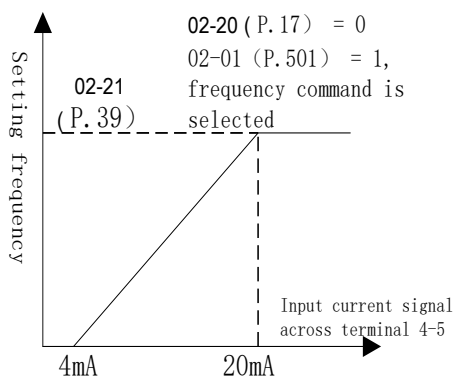

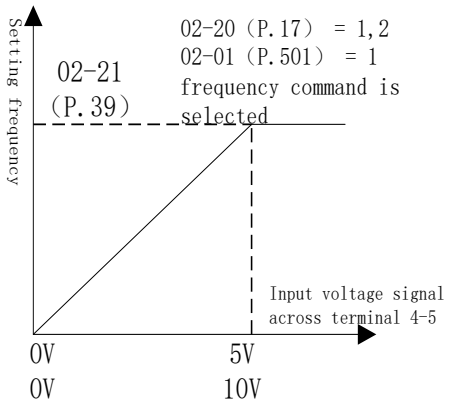

Note: 1. In “external mode” or “mixed mode 2” or “mixed mode 4”, if AU is “on” and 02-01(P.501)=1, the target frequency of the inverter is determined by the signal of terminal 4-5; and if AU is “off”, please refer to 02-00(P.500), 02-01(P.501), 02-02(P.504).

2. In “external mode” or “mixed mode 2” or “mixed mode 4”, If AU and any one of RH, RM, RL or REX are “on” at the same time, the target frequency of the inverter will give priority to multi-speed.

3. RH, RM, RL, REX, AU mentioned in this paragraph are the functional names of “terminals for multi-function digital input”. Please refer to 03-00~03-09(P.80~P.84、P.86、P.126~P.128、P.550) for function selection and usage of multi-function digital input terminals. Please refer to section 3.5 for relevant wiring arrangement.

◆ Terminal 4-5 disconnection function selection

1) If 02-24(P.184)=0, after disconnection, the inverter will slow down to 0Hz, and after reconnection, the inverter will accelerate to the current corresponding frequency.
2) If 02-24(P.184)=1, after disconnection, the inverter will slow down to 0Hz and the multi-function digital output terminal will set off an alarm at the same time; after reconnection, the alarm will be released and the inverter will accelerate to the current corresponding frequency.
3) If 02-24(P.184)=2, after disconnection, the keypad will display “AEr” alarm, the inverter will stop immediately, and reset is required to release the alarm.
4) If 02-24(P.184) = 3, after disconnection, the inverter will continue to run according to the frequency command before disconnection, the multi-function digital output terminal will set off an alarm, which will be released after reconnection.

Note: 1. The disconnection function of terminals 4-5 is only effective for current disconnection. Please note the setting of parameter 02-20 (P.17) and the position of SW2.

2. Please refer to 03-10(P.40), 03-11(P.85) ,03-12(P.129) and 03-13(P.130) for functional selection of multi-function digital output terminals; and refer to section 3.5 for relevant wiring arrangement.

◆ Input current/voltage at terminal 4-5

The input current/voltage setting of terminal 4-5 is similar to that of terminal 2-5, with the same effect. However, no negative voltage can be applied to terminals 4-5 and the minimum current input is 4mA.

Note: The realization of the 4-5 terminal function hereby must first make the toggle switch SW2 to the corresponding position and ensure that it matches the 02-20(P.17) set value.

5.3.7 3-5 Selection and processing of terminal 3-5 input

➢ Select the signal specifications, frequency compensation function, etc. of terminal 3-5 input.

Parameter	Name	Default	Setting Range	Content
02-29 P.531	3-5 input signal selection	1	0	Effective range of signal sampling is 4~20mA.
			1	Effective range of signal sampling is 0~10V.
			2	Effective range of signal sampling is 0~5V.
02-30 P.508	3-5 maximum operation frequency	50.00Hz	1.00~650.00Hz	50Hz system (00-24(P.189)=1)
		60.00Hz		60Hz system (00-24(P.189)=0)
02-31 P.527	3-5 filter time	30ms	0~2000ms	---
02-32 P.507	The bias rate of 3-5 current/voltage signal	0.0%	-100.0%~100.0%	---
02-33 P.545	3-5 disconnection selection	0	0	Not selected
			1	Decelerate to 0Hz, Multi-function digital output terminal will set off alarm.
			2	Inverter will stop immediately, and keypad will display “AEr” alarm.
			3	Inverter will run continuously according to the frequency command before disconnection. Multi-function digital output terminal will set off alarm.
02-34 P.548	Minimum input current/voltage of terminal 3-5	0.00V	0~10.00V	---
02-35 P.549	Maximum input current/voltage of terminal 3-5	10.00V	0~10.00V	---
02-36 P.546	Percentage corresponding to minimum input current/voltage of terminal 3-5	0.0%	-100.0%~100.0%	---
02-37 P.547	Percentage corresponding to maximum input current/voltage of terminal 3-5	100.0%	-100.0%~100.0%	---

Setting Selection and processing of terminal 3-5 input

◆ The function setting of the terminal 3-5 analog input refers to the 4-5 terminal.

Note: 1. The disconnection function of terminals 3-5 is only effective for current disconnection. Please pay attention to the setting of parameter 02-29 (P.531) and the position of SW1.

2. The 3-5 terminal function hereby must first make the toggle switch SW1 to the corresponding position and ensure that it matches the 02-29(P.531) set value.

5.3.8 Selection and processing of input terminal HDI

- The selection and processing of HDI input are only applicable to digital input HDI terminals, and other digital input terminals cannot be set as HDI functions.

Parameter	Name	Default	Setting Range	Content
02-38 P.526	HDI filter time	10ms	0~2000ms	---
02-39 P.524	HDI minimum input frequency	0.00kHz	0~100.00kHz	---
02-40 P.525	HDI maximum input frequency	100.00 kHz	0~100.00kHz	---
02-41 P.522	Percentage corresponding to minimum input frequency of HDI	0.0%	-100.0%~100.0%	---
02-42 P.523	Percentage corresponding to maximum input frequency of HDI	100.0%	-100.0%~100.0%	---

Setting Selection and processing of HDI input

- "HDI filter constant setting" 02-38 (P.526) is used to filter out the vibration of operation frequency caused by factors such as component precision or noise. The larger the set value of 02-38(P.526), the better the filtering ability, but meantime it will also cause the problem of slow response.

Note: The calculation method of HDI input signal frequency is similar to 2-5 analog input, and the calculation formula is 01-00(P.1) *((input frequency−02-39(P.524)) * (02-42(P.523) - 02-41(P.522)) / (02-40(P.525) - 02-39(P.524)) +02-41(P.522)).

5.3.9 HDO frequency multiplication coefficient

➢ This parameter is used to set the characteristics of the output square wave of HDO terminal.

Parameter	Name	Default	Setting range	Content
02-43 P.74	HDO frequency multiplication coefficient	0	0	Select the output function of HDO terminal as FM function
			1~9000	Select the square wave pulse of 02-43(P.74) frequency multiplication of the operation frequency output by HDO terminal

Setting HDO frequency multiplication coefficient

◆ When the setting value of 02-43(P.74) is 1~9000, the external terminal "HDO" is a frequency multiplication output function, with a maximum of 100kHz.

◆ When the setting value of 02-43(P.74) is 5 and the instantaneous operation frequency is 20Hz, the output pulse wave measured between the "HDO" output terminal and the SD terminal is shown below:

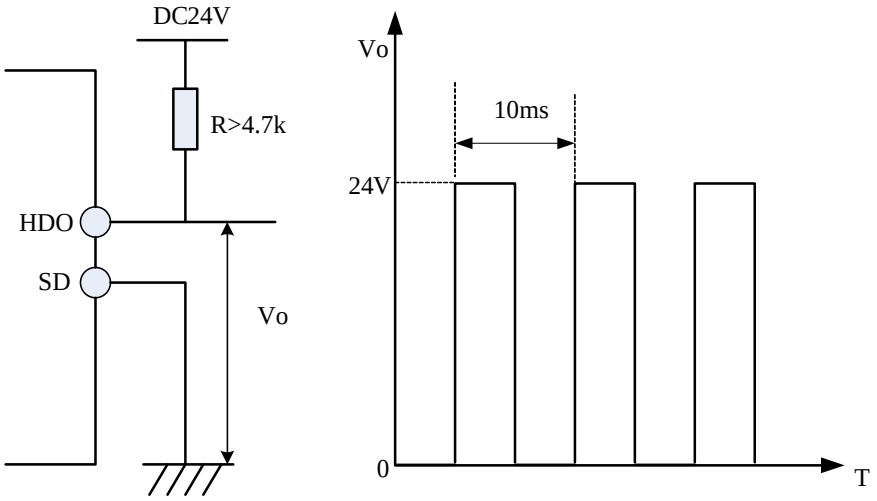

Note: 02-43(P.74)=1 means double output, and the inverter can provide 1-599Hz output with an accuracy of 1%. When the setting value of 02-43(P.74) is larger and the operation frequency is higher, the accuracy will decrease.

5.3.10 Function selection of FM output

➢ Selects the data to be output via analog output terminal FM, when the output function of HDO terminal is FM function

Parameter	Name	Default	Setting range	Content
02-44 P.543	Function selection of FM output	0	0	Output frequency, the frequency display reference 02-51 (P.55) is 100%.
			1	Output current, the frequency display reference 02-52 (P.56) is 100%.
			2	Output DC bus voltage, the OV level is 100%.
			3	Output the temperature rising accumulation rate of inverter, the NTC level is 100%.
			4	Output inverter electronic thermal rate: The electronic thermal relay running (06-00(P.9)≠0) or the electronic thermal relay of the inverter's IGBT module running (06-00(P.9)=0) is 100%.
			5	Target frequency, the frequency display reference 02-51(P.55) is 100%.
			6	Fixed pulse output, pulse output level is set by 02-54(P.541).
			7	Output voltage, inverter rated voltage is 100%.

Parameter	Name	Default	Setting range	Content
02-44 P.543	Function selection of FM output	0	8	Excitation current, the motor rated current is 100%.(Valid only when 00-21(P.300) or 00-22(P.370) is set to 3-6).
			9	Output torque, two times motor rated torque is 100%.(Valid only when 00-21(P.300) or 00-22(P.370) is set o 3-6)
			10	Output power, two times motor rated power is 100%.
			11	The high-speed pulse input, 100.00KHz is 100%.
			12	Motor operation speed, the display reference of 02-51(P.55) is 100%.

Setting Usage of analog output terminal FM

- For terminal FM calibration, please refer to calibration parameter for FM in section 5.4.7.

5.3.11 Selection and handling of output terminal AM1

- This function is used to adjust the output terminal AM1 of inverter analog signal and the level of AM1 output to the header of analog meter.

Parameter	Name	Default	Setting range	Content
02-45 P.64	AM1 output signal selection	0	0	Output 0-10V voltage across AM1-5
			1	Reserve
			2	Output 0-20mA current across AM1-5
			3	Output 4-20mA current across AM1-5
02-46 P.191	AM1 output gain	100.00 %	0~150.00%	---
02-47 P.190	AM1 output bias	0.00%	0~150.00%	---

Setting Selection and handling of output terminal AM1

- The output current/voltage of AM1 terminal is set by the toggle switch SW3 on the keypad and the parameters 02-45(P.64). When selecting the output type of AM1 terminal, first dial toggle switch SW3 to the corresponding position, and then set the value of 02-45(P.64).

- The output of AM1 terminal is shown as follows:

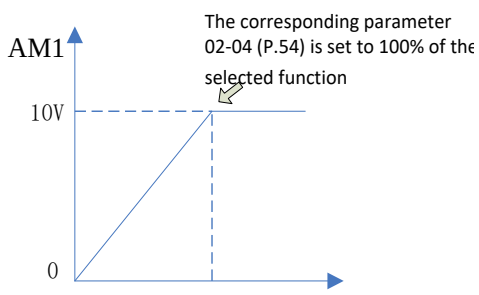

Figure 1. AM1-5 output 0-10V voltage

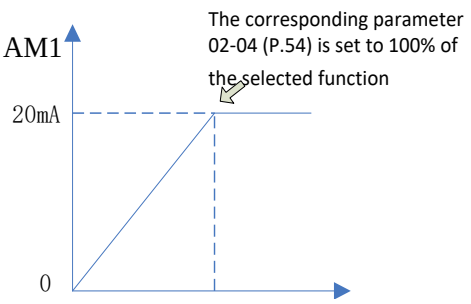

Figure 2. AM1-5 output 0-20mA currency

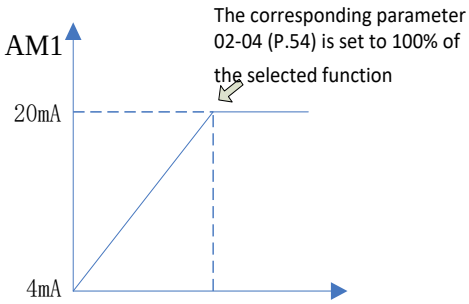

Figure 3. AM1-5 output 4-20mA currency

- The meter needs to be calibrated due to differences in components. The voltage/current calibration of AM1 terminal includes the following steps:
  1. Set the toggle switch SW3 to the position of 0-10V/0-20mA, and then set 02-45(P.64)=0 / 02-45(P.64)=2;
  2. Link an "ammeter with full scale of 10V/20mA" between AM1 terminal and 5 terminal, and set 02-04(P.54)=0, 02-51(P.55)=60Hz.
  3. Set 01-11(P.13) to 0, start the motor operation, and fix the output frequency of the inverter to 0Hz.
  4. Press the key of [∧] to adjust the value of 02-47(P.190), and the AM1 output bias value displayed on the display screen is accumulated rising, and press the key of [WRITE] and hold for more than 1 second to make the pointer of the meter moving upwards; Press the key of [∨] to adjust the value of 02-47(P.190), and the AM1 output bias value displayed on the display screen is descending down, and press the key of [WRITE] and hold for more than 1 second to make the pointer of the meter moving downwards; When the pointer of the meter is adjusted to the position of the 0 scale, the calibration of AM1 output bias value is completed.
  5. Adjust and fix the output frequency of the inverter at 60Hz.
  6. Read out the setting value of 02-46(P.191), and the keypad displays the AM1 output gain.
  7. Press the key of [∧] or [∨] to adjust the value of 02-46(P.191), and press the key of [WRITE] and hold for more than 1 second to make the pointer of the meter moving upwards or downwards. When the pointer of the meter is adjusted to the position of the full scale, the calibration is completed.

Note: When selecting the AM1 output signals, please pay attention the switching of SW3. If 4~20mA output current is selected, please put SW3 to the 0-20mA side.

5.3.12 Selection and handling of output terminal AM2

- This function is used to adjust the output terminal AM2 of inverter analog signal and the level of AM2 output to the header of analog meter.

Parameter	Name	Default	Setting range	Content
02-48 P.538	AM2 output signal selection	0	0	Output 0-10V voltage across AM2-5.
			1	Reserve
			2	Output 0-20mA current across AM2-5
			3	Output 4-20mA current across AM2-5
02-49 P.536	AM2 output gain	100.00 %	0~150.00%	---
02-50 P.535	AM2 output bias	0.00%	0~150.00%	---

Setting Selection and handling of output terminal AM2

- The function of this terminal refers to the relevant description of AM1. The adjustment of AM2 bias voltage and gain is similar to AM1, that is, 02-50(P.535) corresponds to 02-47(P.190) and 02-49(P.536) corresponds to 02-46(P.191).
- The output current/voltage of AM2 terminal is set by the toggle switch SW4 on the keypad and the parameters 02-48(P.538), with the default value of 0-10V.

Note: When selecting the AM2 output signals, please pay attention the switching of SW4. If 4~20mA output current is selected, please put SW4 to the 0-20mA side.

5.3.13 Display reference at the analog output

➢ It is used to set the display reference when selecting the output frequency and output current during AM/FM analog output.

Parameter	Name	Default	Setting range	Content
02-51 P.55	Frequency display reference at analog output	50.00Hz	0~650.00Hz	50Hz system setting (00-24(P.189)=1)
		60.00Hz		60Hz system setting (00-24(P.189)=0)
02-52 P.56	Current monitoring reference at analog output	Note	0~500.00A	Types below Frame G
			0~5000.0A	Frame G and types above

Setting Display reference

◆ The set frequency of 02-51(P.55) is 100% corresponding to the maximum output of AM/FM.

◆ The set frequency of 02-52(P.56) is 100% corresponding to the maximum output of AM/FM.

Note: The default value of parameters 02-52(P.56) is determined by the types.

5.3.14 AM/FM fixed output level

➢ It makes the AM/FM output a fixed output.

Parameter	Name	Default	Setting range	Content
02-53 P.539	AM2 fixed output level	0.0%	0~100.0%	---
02-54 P.541	AM1/FM fixed output level	0.0%	0~100.0%	---

Setting

◆ The voltage/current output of AM is controlled by 02-53(P.539) and 02-54(P.541). The setting of 02-53(P.539) is 0-100.0% corresponding to 0-10V/20mA of AM2 and the setting of 02-54(P.541) is 0-100.0% corresponding to 0-10V/20mA of AM1.

For example: 02-54(P.541)=50%, AM1 output is 10V*50%=5V.

5.3.15 PT100 level setting

➢ Setting the PT100 protection level and operating frequency through parameters

Parameter	Name	Default	Setting range	Content	
02-55 P.592	PT100 voltage level 1	5.00V	0~10.00V	0	Without PT100 level 1 protection
				0.10V~10.00V	If PT100 is greater than level 1, the output frequency will decrease to 02-57 (P.594) after 02-58 (P.595) setting time.
02-56 P.593	PT100 voltage level 2	7.00V	0~10.00V	0	Without PT100 level 2 protection
				0.10V~10.00V	If PT100 is greater than level 2, act correspondingly according to the settings of 06-15 (P.533).
02-57 P.594	Starting frequency of PT100 level 1	0.00Hz	0~650.00Hz	The output frequency will be reduced to 02-57 (P.594) after exceeding PT100 level 1.	
02-58 P.595	Delay time for starting PT100 level 1	60s	0~6000s	Action delay time when output frequency decreases to 02-57 (P.594)	

Settin PT100 level setting

- PT100 is input through analog voltage, and the voltage input range of 2-5/4-5/3-5 is set to 0-10V (02-08(P.73)=1; 02-20(P.17)=1; 02-29(P.531)=1, please note that the voltage/current switch on the keypad is set to the voltage input position). Set analog voltage input for PT100 function (02-00(P.500),02-01(P.501),02-02(P.504) are set to 12).
- When the inverter is running and the PT100 input voltage is greater than the set value of 02-55(P.592), the inverter output frequency will decrease to the set frequency of 02-57(P.594) after the set time of 02-58(P.595).
- When the PT100 input voltage is greater than the set value of 02-56(P.593), the inverter will make corresponding actions according to the setting of 06-15(P.533).

5.3.16 FM calibration parameter

➢ It is used to adjust the FM output terminal of inverter analog signal and the level of FM output to the header of analog meter.

Parameter	Name	Default	Setting range	Content
02-59 P.187	FM calibration parameter	450	0~9998	---

Setting FM calibration parameter

- The output of HDO terminal as FM function is shown in the following figure:

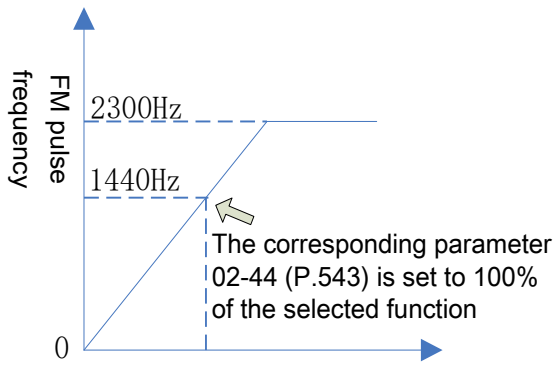

- The meter needs to be calibrated due to differences in components. The voltage/current calibration of HDO terminal includes the following steps:

- 1. Link an “ammeter with full scale of 1mA or frequency counter” between HDO terminal and SD terminal. The wiring is shown in the figure below and set 02-51(P.55)=60Hz, 02-44(P.543)=0.

- 2. Start the motor operation and fix the inverter output frequency to 60Hz.

- 3. After the operation is stable, read out the set value of 02-59(P.187), and the keypad displays the current FM calibration coefficient. Press the key of ∧ to adjust the value of 02-59(P.187), and the FM calibration coefficient displayed on the keypad is accumulated rising, and press the key of WRITE and hold for more than 1 second to make the pointer of the meter moving upwards; Press the key of ∨ to adjust the value of 02-59(P.187), and the FM calibration coefficient displayed on the keypad is descending down, and press the key of WRITE and hold for more than 1 second to make the pointer of the meter moving downwards.

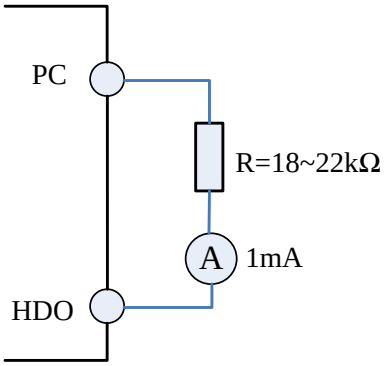

5.4 Digital input/output parameter group 03

Parameter group	Parameter number	Parameter name	Setting range	Default	Reference page
03-00	P.83	STF function selection	0:STF (forward rotation of inverter)	0	134
			1:STR (reverse rotation of inverter)		
			2:RL (multi-speed low speed)		
			3:RM (multi-speed medium speed)		
			4:RH (multi-speed high speed)		
			5:AU (Analog terminal 4-5 is preferred)		
			6: External thermal relay action		
			7:MRS (Inverter output stops immediately)		
			8: (the second function of inverter)		
			9:EXT (external jog)		
			10: STF+EXJ		
			11: STR+EXJ		
			12: STF+RT		
			13: STR+RT		
			14: STF+RL		
			15: STR+RL		
			16: STF+RM		
			17: STR+RM		
			18: STF+RH		
			19: STR+RH		
			20: STF+RL+RM		
			21: STR+RL+RM		
			22: STF+RT+RL		
			23: STR+RT+RL		
			24: STF+RT+RM		
			25: STR+RT+RM		
			26: STF+RT+RL+RM		
			27: STR+RT+RL+RM		
			28:RUN (forward rotation of motor)		
			29:STF/STR (cooperating with RUN signal, when STF/STR is “on”, the motor rotates reversely, while STF/STR is “off”, the motor rotates forward.)		
			30:RES (external Reset function)		
			31:STOP (cooperating with RUN signal, , STF/STR terminals can be combined into three-wire function.)		
			32:REX (combine multi-speed into 16 segment speed)		
			33:PO (In the external mode, select the program operation mode.)		
			34:RES_E (The external Reset signal is only valid when an alarm occurs.)		
			35:MPO (Manual cycle function in external mode)		
			36:TRI (Triangular wave function)		

Parameter group	Parameter number	Parameter name	Setting range	Default	Reference page
03-00	P.83	STF function selection	37:GP_BP (Power frequency conversion switching function)	0	134
			38:CS (Manually switch power frequency signals)		
			39:STF/STR +STOP (cooperating with RUN signal, when ON, the motor rotates reversely, while OFF, the motor stops and then rotates forward.)		
			40:P_MRS (Inverter output stops immediately, where MRS is the pulse signal input.)		
			41:PWM PWM set frequency (Note 1)		
			42: Reserve		
			43:RUN_EN (Enable digital input terminal operation)		
			44:PID_OFF Enable digital input terminal turning off PID		
			45: The second mode		
			46~56: Reserve		
			57: High-speed pulse input function (Note 1)		
			58: Analog terminal 2-5 is preferred		
			59: Analog terminal 3-5 is preferred		
			60: Start and stop of PLC		
			61~64: Reserve		
			65: Pause of external acceleration and deceleration		
			66: External forced stop		
			67~71: Reserve		
			72：Pump 1 manual soft start		
			73：Pump 2manual soft start		
			74：Pump 3 manual soft start		
			75：Pump 4 manual soft start		
			76：Pump 5 manual soft start		
			77：Pump 6 manual soft start		
			78：Pump 7 manual soft start		
			79：Pump 1 failure		
			80：Pump 2 failure		
			81：Pump 3 failure		
			82：Pump 4 failure		
			83：Pump 5 failure		
			84：Pump 6 failure		
			85：Pump 7failure		
			86：Failure of all pumps		
			87~89：reserved		
			90：Upper level of sump		
			91：Lower limit of sump water level		
			92：Fire mode command 1(with run command)		
			93：Fire mode command 2(without run command)		
			99999: This external terminal function is not selected.		

Parameter group	Parameter number	Parameter name	Setting range	Default	Reference page
03-01	P.84	STR function selection	The same as 03-00(P.83)	1	134
03-02	P.86	RES function selection	The same as 03-00(P.83)	30	134
03-03	P.80	M0 function selection	The same as 03-00(P.83)	2	134
03-04	P.81	M1 function selection	The same as 03-00(P.83)	3	134
03-05	P.82	M2 function selection	The same as 03-00(P.83)	4	134
03-06	P.126	M3 function selection	The same as 03-00(P.83)	5	136
03-07	P.127	M4 function selection	The same as 03-00(P.83)	8	136
03-08	P.128	M5 function selection	The same as 03-00(P.83)	7	136
03-09	P.550	HDI terminal function setting	The same as 03-00(P.83)	57	136
03-10	P.40	SO1-SE function selection	0:RUN (The inverter is running)	1	139
			1:SU (Output frequency arrival)		
			2:FU (Output frequency detection)		
			3:OL (Overload alarm)		
			4:OMD (Zero current detected)		
			5:ALARM (Alarm detected)		
			6:PO1 (Signal detected in program running segment)		
			7:PO2 (Signal detected during program operation cycle)		
			8:PO3 (Pause signal detected during program operation)		
			9:BP (Power frequency conversion switching, frequency conversion output)		
			10:GP (Power frequency conversion switching, power frequency output)		
			11:OMD1 (Zero current detected)		
			12：Pump 1 frequency conversion control		
			13：Pump 1 power frequency control		
			14：Pump 2 frequency conversion control		
			15：Pump 2 power frequency control		
			16: Reserve		
			17:RY (The inverter is ready for operation)		
			18: Maintenance alarm function detected		
			19:OL2 (Over torque alarm output)		
			20: Abnormal service life of capacitor		
			21~22: Reserve		
			23: Power off sign detected		
			24：Pump 3 frequency conversion control		
			25：Pump 3 power frequency control		
			26：Pump 4 frequency conversion control		
			27：Pump 4 power frequency control		
			28：Pump 5 frequency conversion control		
			29：Pump 5 power frequency control		
			30：Pump 6 frequency conversion control		
			31：Pump 6 power frequency control		
			32：Pump 7 frequency conversion control		
			33：Pump 7 power frequency control		
			34：Indication of dormant operation		
			35：Hydraulic overpressure indication		
			36：Underpressure indication of water pressure		
			37~38：reserved		
			39：Power frequency control of dormant pump(16-01(P.1001)~16-07(P.1007) have been set to sleep pump this function is invalid.)		
			40：Sewage pump power frequency control(16-01(P.1001)~16-07(P.1007) have been set to sleep pump this function is invalid.)		

Multi-speed parameter group 03

Parameter group	Parameter number	Parameter name	Setting range	Default	Reference page
03-10	P.40	SO1-SE function selection	41：PID feedback line break (AEr) alarm 42：Fire mode indication 43：Fire mode bypass indication	1	139
03-11	P.85	A1-B1-C1 function selection	The same as 03-10(P.40)	5	140
03-12	P.129	SO2-SE function selection	The same as 03-10(P.40)	2	140
03-13	P.130	A2-B2-C2 function selection	The same as 03-10(P.40)	0	140
03-14	P.87	Multi-function digital input terminal that inputs positive and negative logic	0~1023	0	141
03-15	P.88	The positive and negative logic of the multi-function digital output terminal	0~4095	0	141
03-16	P.120	Delay time of output signal	0~3600.0s	0.0s	142
03-17	P.157	Filtering time of the digital input terminal	0~2000ms	4ms	142
03-18	P.158	Enable digital input terminal power-on	0: Not enable digital input terminal power-on 1: Enable digital input terminal power-on	0	143
03-20	P.41	Output frequency detection range	0~100.0%	10.0%	144
03-21	P.42	Forward rotation output frequency detected	0~650.00Hz	6.00Hz	144
03-22	P.43	Reverse rotation output frequency detected	0~650.00Hz 99999: the same as the setting of 03-21(P.42)	99999	144
03-23	P.62	Zero current detected level	0~200.0% 99999: Invalid function	5.0%	145
03-24	P.63	Zero current detected time	0~100.00s 99999: Invalid function	0.50s	145
03-25	P.551	Digital input terminal M10	The same as 03-00(P.83)	99999	146
03-26	P.552	Digital input terminal M11	The same as 03-00(P.83)	99999	146
03-27	P.553	Digital input terminal M12	The same as 03-00(P.83)	99999	146
03-28	P.554	Digital input terminal M13	The same as 03-00(P.83)	99999	146
03-29	P.555	Digital input terminal M14	The same as 03-00(P.83)	99999	146
03-30	P.556	Digital input terminal M15	The same as 03-00(P.83)	99999	146
03-41	P.567	The positive and negative logic of the external digital input terminal	0~65535	0	147
03-42	P.568	Digital output terminal A10	The same as 03-10(P.40)	99999	147
03-43	P.569	Digital output terminal A11	The same as 03-10(P.40)	99999	147
03-44	P.570	Digital output terminal A12	The same as 03-10(P.40)	99999	147
03-45	P.571	Digital output terminal A13	The same as 03-10(P.40)	99999	147
03-46	P.572	Digital output terminal A14	The same as 03-10(P.40)	99999	147
03-47	P.573	Digital output terminal A15	The same as 03-10(P.40)	99999	147
03-48	P.574	Digital output terminal A16	The same as 03-10(P.40)	99999	147
03-49	P.575	Digital output terminal A17	The same as 03-10(P.40)	99999	147
03-59	P.585	Monitor digital input terminal signal status on inverter	Read only	Read only	148
03-60	P.586	Monitor digital output terminal signal status on and external of inverter	Read only	Read only	148
03-61	P.587	Monitor external digital input terminal signal status	Read only	Read only	148

5.4.1 Function selection of digital input

- Change the function of each digital input terminal through parameter selection, and each terminal can select any function between 0-91 (Note 1).

Parameter	Name	Default	Setting range	Content
03-00 P.83	STF input function selection	0	0	STF (forward rotation of inverter)
			1	STR (reverse rotation of inverter)
			2	RL (multi-speed low speed)
			3	RM (multi-speed medium speed)
			4	RH (multi-speed high speed)
			5	AU (Analog terminal 4-5 is preferred)
			6	OH external thermal relay action
			7	MRS (Inverter output stops immediately)
			8	RT (the second function of inverter)
			9	EXT (external jog)
			10	STF+EXJ
			11	STR+EXJ
			12	STF+RT
			13	STR+RT
			14	STF+RL
			15	STR+RL
			16	STF+RM
			17	STR+RM
			18	STF+RH
			19	STR+RH
			20	STF+RL+RM
			21	STR+RL+RM
			22	STF+RT+RL
			23	STR+RT+RL
			24	STF+RT+RM
			25	STR+RT+RM
			26	STF+RT+RL+RM
			27	STR+RT+RL+RM
			28	RUN (Forward rotation of motor)
			29	STF/STR (cooperating with RUN signal, when STF/STR is “on”, the motor rotates reversely, while STF/STR is “off”, the motor rotates forward.)
			30	RES (external Reset function)
			31	STOP (cooperating with RUN signal, , STF/STR terminals can be combined into three-wire function.)
			32	REX (combine multi-speed into 16 segment speed)
			33	PO (In the external mode, select the program operation mode.)
			34	RES_E (The external Reset signal is only valid when an alarm occurs.)
			35	MPO (Manual cycle function in external mode)
			36	TRI (Triangular wave function)
			37	GP_BP (Power frequency conversion switching function)
			38	CS (Manually switch power frequency signals)

Parameter	Name	Default	Setting range	Content
03-00 P.83	STF input function selection	0	39	STF/STR +STOP (cooperating with RUN signal, when ON, the motor rotates reversely, while OFF, the motor stops and then rotates forward.)
			40	P_MRS (Inverter output stops immediately, where MRS is the pulse signal input.)
			41	PWM Set frequency (Note 1)
			42	Reserve
			43	RUN_EN (Digital input operation enable)
			44	PID_OFF enable digital input terminal turning off PID
			45	The second mode
			46~56	Reserve
			57	High-speed pulse input function (Note 1)
			58	Analog terminal 2-5 is preferred
			59	Analog terminal 3-5 is preferred
			60	Start and stop of PLC
			61~64	Reserve
			65	Pause of external acceleration and deceleration
			66	External forced stop
			67~71	Reserve
			72	Pump 1 manual soft start
			73	Pump 2manual soft start
			74	Pump 3 manual soft start
			75	Pump 4 manual soft start
			76	Pump 5 manual soft start
			77	Pump 6 manual soft start
			78	Pump 7 manual soft start
			79	Pump 1 failure
			80	Pump 2 failure
			81	Pump 3 failure
			82	Pump 4 failure
			83	Pump 5 failure
			84	Pump 6 failure
			85	Pump 7failure
			87~89	Failure of all pumps
			87	reserved
			90	Upper level of sump
			91	Lower limit of sump water level
			92	Fire mode command 1 (with run command)
			93	Fire mode command 2 (without run command)
			99999	This external terminal function is not selected.
03-01 P.84	STR input function selection	1	The same as 03-00(P.83)	The same as 03-00(P.83)
03-02 P.86	RES input function selection	30	The same as 03-00(P.83)	The same as 03-00(P.83)
03-03 P.80	M0 input function selection	2	The same as 03-00(P.83)	The same as 03-00(P.83)
03-04 P.81	M1 input function selection	3	The same as 03-00(P.83)	The same as 03-00(P.83)
03-05 P.82	M2 input function selection	4	The same as 03-00(P.83)	The same as 03-00(P.83)

Parameter	Name	Default	Setting range	Content
03-06 P.126	M3 input function selection	5	The same as 03-00(P.83)	The same as 03-00(P.83)
03-07 P.127	M4 input function selection	8	The same as 03-00(P.83)	The same as 03-00(P.83)
03-08 P.128	M5 input function selection	7	The same as 03-00(P.83)	The same as 03-00(P.83)
03-09 P.550	HDI input function selection	57	The same as 03-00(P.83)	The same as 03-00(P.83)

Setting Function selection of digital input

- At default, 03-03(P.80)=2 (RL), 03-04(P.81)=3 (RM), 03-05(P.82)=4 (RH), 03-00(P.83)=0 (STF), 03-01(P.84)=1 (STR), 03-02(P.86)=30 (RES), 03-06(P.126)=5 (AU), 03-07(P.127)=8(RT),03-08(P.128)=7(MRS) , 03-09(P.550)=57 (HDI_FRQ).
- If changing the setting of 03-00~03-09(P.80~P.84, P.86, P.126~P.128, P.550), the functional significance of the terminals will be changed. For example, 03-03(P.80)=2 means that the M0 terminal acts as RL. If changing the set 03-03(P.80)=8, the function of the M0 terminal will be changed to RT, which will act as the second function selection terminal. In addition, for example, 03-00(P.83)=0 means that the STF terminal serves as the STF forward rotation function, and if changing the set of 03-00(P.83)=6, the STF terminal function will be changed to OH, which will serve as the input function terminal of the external thermal relay
- Analog terminal 4-5 is preferred

  When the contact status of this setting function terminal is (ON), sthe external frequency command source of the inverter is forced to be given by 4-5 (If the frequency command is simultaneously set to 4-5, 2-5, 3-5, the priority is 4-5 > 2-5 > 3-5).

- Wiring of external thermal relay (OH): the traditional wiring method of the motor is to attach a thermal relay to the front end of the motor, so as to prevent the motor from overheating and damaging. After the external thermal relay jumps and disconnects, the inverter will generate alarm of disconnection, and the keypad will display OHT.
- Four modes to control the operation of the inverter (1 means connected, 0 means disconnected, X=0, 1, 2, 3, 4, 6)

  1) Two-wire control mode 1:

K0	K1	Run command
0	0	Stop
1	0	Forward rotation
0	1	Reversal rotation
1	1	Stop

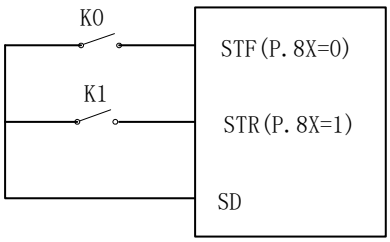

2) Two-wire control mode 2:

K0	K1	Run command
0	0	Stop
0	1	Stop
1	0	Forward rotation
1	1	Reversal rotation

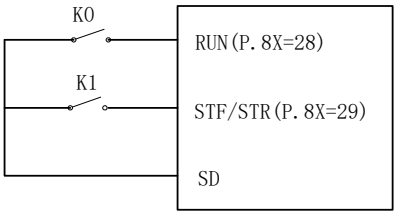

3) Three-wire control mode 1 (with self-hold function): K0 has STOP function, normally closed, and the inverter stops when it is disconnected. K1 and K2 are forward rotation and reverse rotation signals, normally open, and pulse signals are valid for them, i.e. jog signals are valid.

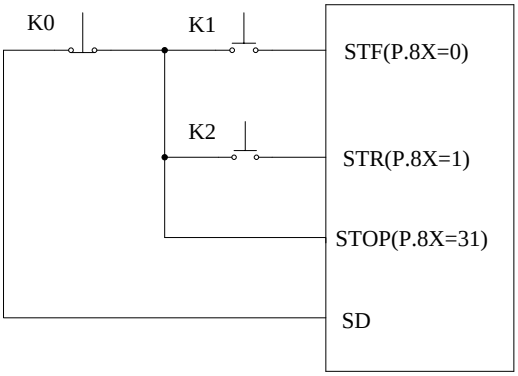

- Three-wire control mode 1 (with self-hold function): K1 has STOP function, normally closed, and the inverter stops when it is disconnected. K2 is RUN signal, normally open, and pulse signals are valid for it, i.e. jog signal is valid. If the relevant parameter corresponding to the digital input terminal of the reversing signal (STF/STR) is set to 39, when the inverter needs to change direction, stop it first and restart the inverter only after the RUN signal is applied.

K0	Run command
0	Forward rotation
1	Reversal rotation

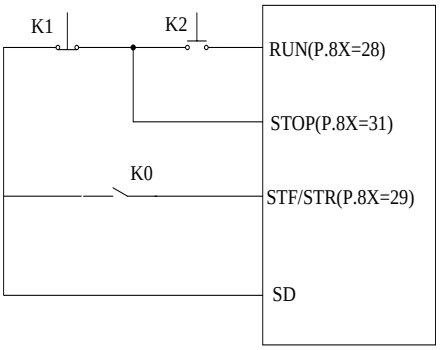

- In external mode, when PO is “on”, select the program operation mode. At this time, the STF terminal is the starting signal source. If the STF is “on”, the program will start running (starting from the first segment), and if the STF is “off”, the program will stop running. STR is the pause signal source. If STR is “on”, the operation will pause, and if STR is “off”, the operation will continue (starting from the pause segment). Please refer to 04-15(P.100), 04-27(P.101)~04-42(P.118), 04-16(P.121)~04-18(P.123) and 04-19(P.131)~04-26(P.138) for specific parameters.

- In external mode, if MPO is “on”, select manual cycle mode. Please refer to 04-19(P.131)~04-26(P.138) for specific parameters.

- PWM set frequency (03-09(P.550)=41): the inverter measures and calculates the ON time and OFF time in each PWM cycle and uses them as frequency commands. (The allowable PWM signal cycle is within 0.9ms~1100ms.).

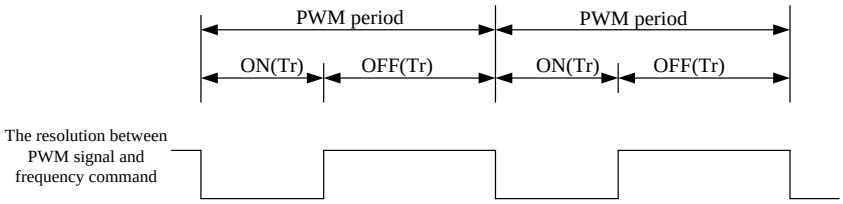

$$\text{Frequency command（Hz）} = \frac{\text{ON time}}{\text{PWM period}} \times \text{upper limit frequency 01-00(P.1)(Hz)}$$

Only HDI terminal has this function. In the vicinity of the lowest frequency or the highest frequency, the accuracy of the output frequency of the input signal will be reduced, thus avoiding its use in occasions requiring high-accuracy frequency control.

- The HDI terminal, as a high-speed pulse input, is used as a given source of the target frequency. Please refer to 5.3.8.

- Analog terminal 2-5 is preferred

  When the contact status of this setting function terminal is (ON), the external frequency command source of the inverter is forced to be given by 2-5 (If the frequency command is simultaneously set to 4-5, 2-5, 3-5, the priority is 2-5 > 4-5 > 3-5).

- Analog terminal 3-5 is preferred

  When the contact status of this setting function terminal is (ON), the external frequency command source of the inverter is forced to be given by 3-5 (If the frequency command is simultaneously set to 4-5, 2-5, 3-5, the priority is 3-5 > 2-5 > 4-5).

- Start and stop of PLC

  When the contact status of this setting function terminal is (ON), the internal PLC is started; When OFF, PLC stops.

- The second mode

  When the contact status of this setting function terminal is (ON) and function and parameter 00-16(P.79)=99999, select the second mode, the run command set by 00-18 (P.109), and the target frequency set by 00-17 (P.97).

- When the external pause function of acceleration and deceleration is executed, the inverter will immediately stop acceleration and deceleration. When this command is released, the inverter will continue to accelerate and decelerate from the forbidden point.

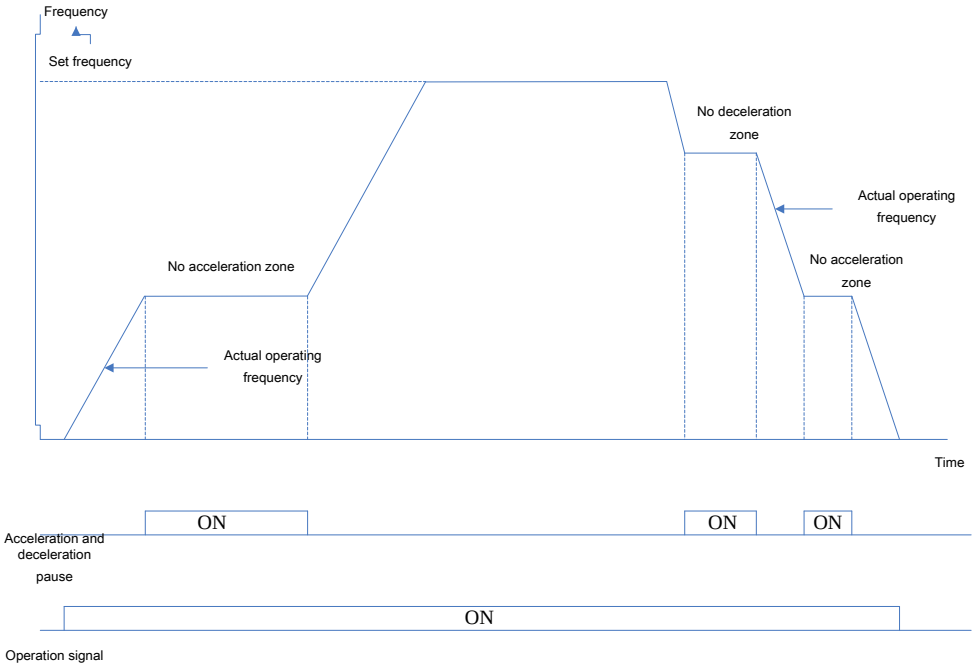

◆ External forced stop

When the contact status of this setting function terminal is (ON), the driver will brake and stop the inverter according to the setting of parameter 00-13(P.71).

◆ Pump X failure

When the contact state (ON) of this function terminal is set, the water pressure is stable and the control contactor of the pump X is in the OFF state, the pump X will not participate in the logic switching of the system, and is always in the stop state.

This function is only applicable to multi-pump water supply systems, refer to 5.14.

◆ All pumps fail

When the contact (ON) of this function terminal is set, all the pumps in the system are free to stop.

This function is only applicable to multi-pump water supply systems, refer to 5.14.

◆ Fire mode command 1 (with run command)

Enable inverter into the fire mode and forced started the drive when (06-84(P.1040) = XXX1 or XXX2) and terminal “ON”.

When the inverter is at stop state, set the terminal “ON” and fire mode start.

◆ Fire mode command 2 (without run command)

Enable inverter into the fire mode when (06-84(P.1040) = XXX1 or XXX2) and terminal “ON”.

If the inverter is at stop state, set terminal “ON”, which will start the fire mode without running .

If the inverter is at running state, set terminal “ON”, run according to the parameter setting.

Note: Setting values of “41” and “57” are only available for HDI terminal.

5.4.2 Function selection of digital output

➢ Detect some information generated during the operation of the inverter.

Parameter	Name	Default	Setting range	Content
03-10 P.40	SO1-SE output function selection	1	0	RUN (The inverter is running): output the signal when the inverter runs above the starting frequency
			1	SU (Output frequency arrival): detect when the output frequency reaches the set frequency
			2	FU (output frequency detected): detect the output signal when operating above the specified frequency
			3	OL (Overload alarm): output signal when current limiting function is running
			4	OMD (Zero current detected): the OMD will output signal, if the percentage of output current of the inverter is lower than the set value of 03-23 (P.62) and exceeds a period of time (03-24(P.63)).
			5	ALARM (Alarm detected)
			6	PO1 (Signal detected in program running segment)
			7	PO2 (Signal detected during program operation cycle)
			8	PO3 (Pause signal detected during program operation)
			9	BP (Power frequency conversion switching, frequency conversion output)
			10	GP (Power frequency conversion switching, power frequency output)
			11	OMD1 (Zero current detected): the OMD1 will output signal, if the output frequency of the inverter reaches the target frequency, the percentage of the output current is lower than the set value of 03-23 (P.62) and exceeds a period of time (set in 03-24 (P.63))
			12	Pump 1 frequency conversion control
			13	Pump 1 power frequency control
			14	Pump 2 frequency conversion control
			15	Pump 2 power frequency control
			16	Reserve
			17	RY (The inverter is ready for operation)
			18	Maintenance alarm function detected
			19	OL2 (Over torque alarm output)
			20	Abnormal service life of capacitor
			21	Reserve
			22	Reserve
			23	Power off sign detected
			24	Pump 3 frequency conversion control
			25	Pump 3 power frequency control
			26	Pump 4 frequency conversion control
			27	Pump 4 power frequency control
			28	Pump 5 frequency conversion control
			29	Pump 5 power frequency control
			30	Pump 6 frequency conversion control
			31	Pump 6 power frequency control
			32	Pump 7 frequency conversion control
			33	Pump 7 power frequency control

Multi-speed parameter group 03

Parameter	Name	Default	Setting range	Content
03-10 P.40	SO1-SE function	1	34	Indication of dormant operation
			35	Hydraulic overpressure indication
			36	Underpressure indication of water pressure
			37~38	reserved
			39	Power frequency control of dormant pump(16-01(P.1001)~16-07(P.1007) have been set to sleep pump this function is invalid.)
			40	Sewage pump power frequency control(16-01(P.1001)~16-07(P.1007) have been set to sleep pump this function is invalid.)
			41	PID feedback line break (AEr) alarm.
			42	Fire mode indication. Into fire mode, indication signal output.
			43	Fire mode bypass indication. Fire mode bypass indication on，indication signal output.
03-11 P.85	A1-B1-C1 output function selection	5	The same as 03-10 (P.40)	The same as 03-10 (P.40)
03-12 P.129	SO2-SE output function selection	2	The same as 03-10 (P.40)	The same as 03-10 (P.40)
03-13 P.130	A2-B2-C2 output function selection	0	The same as 03-10 (P.40)	The same as 03-10 (P.40)

Setting Function selection of digital output

- Multi-function digital output terminal SO1, with the default setting value of 03-10(P.40) being 1, is the SU function. When the value of 03-10(P.40) is changed, it will serve as the corresponding function in the above table, respectively.
- Multi-function digital output terminal SO2, with the default setting value of 03-12(P.129) being 2, is the FU function. When the value of 03-12(P.129) is changed, it will serve as the corresponding function in the above table, respectively.
- The internal structure of the multi-function digital output terminal SO1/SO2-SE is “open collector output architecture”, please refer to sections 3.7 and 3.7.6 for its relevant wiring.
- Multi-function relay A1-B1-C1, with the default setting value of 03-11(P.85) being 5, is the ALARM function. When the value of 03-11(P.85) is changed, it will serve as the corresponding function in the above table, respectively.
- Multi-function relay A2-B2-C2, with the default setting value of 03-13(P.130) being 0, is the RUN function. When the value of 03-13(P.130) is changed, it will serve as the corresponding function in the above table, respectively.

5.4.3 Terminal logic selection

➢ The setting of this function is bit setting. If the bit content is 1, it means that the action of the multi-function digital input terminal is negative logic, otherwise it means that its action is positive logic.

Parameter	Name	Default	Setting range	Content
03-14 P.87	Multi-function digital input terminal that inputs positive and negative logic	0	0~1023	---
03-15 P.88	The positive and negative logic of the multi-function digital output terminal	0	0~4095	---

Setting Digital input/output logic

◆ The definition of each bit in 03-14 (P.87) is as follows:

Weight number bit	2^9	2^8	2^7	2^6	2^5	2^4	2^3	2^2	2^1	2^0
	HDI	M5	M4	M3	RES	M2	M1	M0	STR	STF

For example, in the three-wire control mode 1, the STOP function is required to be normally open (negative logic). Therefore, set 03-03 (P.80) =31, select M0 terminal as the STOP function of three-wire control, 03-00(P.83) =0, 03-01 (P.84) =1, and select STF and STR terminals to serve as the default forward and reverse rotation functions. The setting of parameter 03-14(P.87) shall be as follows:

Weight number bit	2^9	2^8	2^7	2^6	2^5	2^4	2^3	2^2	2^1	2^0
	0	0	0	0	0	0	0	1	0	0

Therefore, 03-14 (P.87)= $0\times2^9 + 0\times2^8 + 0\times2^7 + 0\times2^6 + 0\times2^5 + 0\times2^4 + 0\times2^3 + 1\times2^2 + 0\times2^1 + 0\times2^0 = 4$

◆ The definition of each bit in 03-15 (P.88) is as follows:

Weight number bit	2^{11}	2^{10}	2^9	2^8	2^7	2^6	2^5	2^4	2^3	2^2	2^1	2^0
	ABC17	ABC16	ABC15	ABC14	ABC13	ABC12	ABC11	ABC10	ABC2	SO2	ABC1	SO1
	Expanded digital output											

For example: 03-11(P.85=0) (detected during inverter operation). If the positive logic output bit is set to 0, the multi-function relay is (ON) when the inverter is running and (Off) when the inverter is stopped. Otherwise, if the action bit of negative logic is set to 1, the multi-function relay will be (Off) when the inverter is running and the multi-function relay will be (ON) when the inverter is stopped.

Note: When the “STF” and “STR” terminals are set to negative logic, and if there is no short circuit between the signal and SD, the inverter will output a signal after power-on to drive the motor to run. This is a potential danger, please pay close attention to it.

5.4.4 Output signal delay

- The function of this parameter is to delay and confirm the digital output terminal signal. The delay time is the confirmation time, which can prevent some unknown interference.

Parameter	Name	Default	Setting range	Content
03-16 P.120	Delay time of output signal	0.0s	0~3600.0s	---

Setting Output signal delay

- If 03-16(P.120)=0 and the conditions set by 03-10(P.40) (03-11(P.85), 03-12(P.129), 03-13(P.130)) are met, the signal will be directly output.
- If 03-16(P.120)=0.1~3600, and when the conditions set by 03-10(P.40) (03-11(P.85), 03-12(P.129), 03-13(P.130)) are met, the signal will be output after the set delay time.

5.4.5 Signal filtering of the digital input terminal

- It is used to select the response time of the digital input terminal signal

Parameter	Name	Default	Setting range	Content
03-17 P.157	Filtering time of the input signal of the digital input terminal	4ms	0~2000ms	---

Setting Signal filtering of the digital input terminal

- 03-17 (P.157)is used to select the response time of digital input terminal signals, with the action scope of STR, STF, RES, HDI, M0, M1, M2, M3, M4, M5 and expanded digital input terminals. The HDI terminal is not within the action scope of 03-17(P.157) if it is served as a high-speed pulse input. The actual delay time is 03-17(P.157)*2ms, for example, when 03-17(P.157)=100, then the actual delay time is 200 ms.

5.4.6 Digital input terminal power enable

➢ It is used to select whether the digital input terminal signal is valid when powered on and whether the inverter will act immediately.

Parameter	Name	Default	Setting range	Content
03-18 P.158	Digital input terminal power enable	0	0	Not enable digital input terminal power-on
			1	Digital input terminal power enable

Setting Digital input terminal power enable

◆ If 03-18(P.158)=1, select digital input terminal power enable. In such case, if the functions of the multi-function digital input terminals set before power-on include STF, STR, RUN, MPO and their corresponding digital input terminals are short-circuited, the inverter will not start immediately after power-on. Only after these terminals are short-circuited again will the inverter start to operate. However, if 03-18(P.158)=0, as long as these terminals are short-circuited before power-on, the inverter will start immediately after power-on.

5.4.7 Output frequency detection

➢ Detect the output frequency of the inverter, with an output signal.

Parameter	Name	Default	Setting range	Content
03-20 P.41	Output frequency detection range	10.0%	0~100.0%	---
03-21 P.42	Forward rotation output frequency detected	6.00Hz	0~650.00Hz	---
03-22 P.43	Reverse rotation output frequency detected	99999	0~650.00Hz	---
			99999	the same as the setting of 03-21(P.42)

Setting Output frequency detection range

◆ If 03-20(P.41)=5%, the SU signal will be output when the output frequency falls within the "5% range around the target frequency". For example, the target frequency is set to 60Hz and 03-20(P.41)=5%, then the output frequency falls within the range of 60±60×5%=57Hz~63Hz, and SU signal will be output.

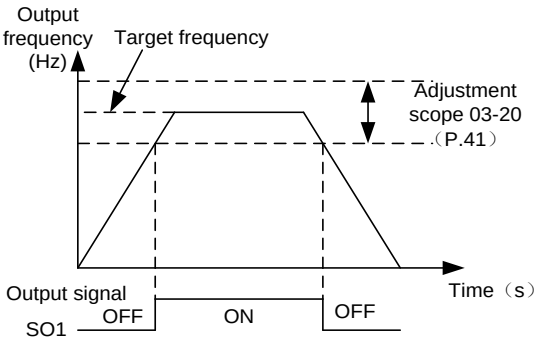

Setting Forward rotation output frequency detection, and reverse rotation output frequency detection

◆ If 03-21(P.42)=30 and 03-22(P.43)=20, the FU signal will be output when the forward rotation output frequency exceeds 30Hz; and when the reverse rotation output frequency exceeds 20Hz, the FU signal will also be output.

◆ If 03-21(P.42)=30 and 03-22(P.43)=99999 (default), the FU signals will be output when the forward and reverse rotation output frequencies exceed 30Hz.

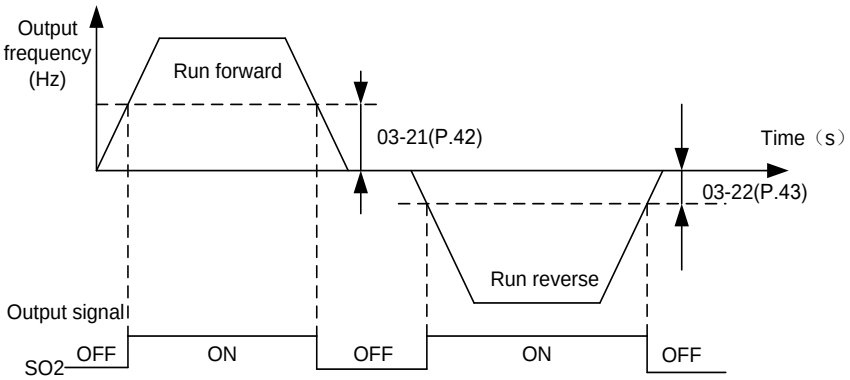

Note: SU and FU mentioned in this paragraph are the functional names of "multi-function digital output terminals" SO1 and SO2. Please refer to 03-10~03-13(P.40,P.85,P.129,P.130) for functional selection of multi-function digital output terminals. Please refer to section 3.5 for relevant wiring.

5.4.8 Zero current detection

➢ It can detect the output current of the inverter in operation and output it to the output terminal.

Parameter	Name	Default	Setting range	Content
03-23 P.62	Zero current detection level	5.0%	0~200.0%	---
			99999	Invalid function
03-24 P.63	Zero current detection level time	0.50s	0~100.00s	---
			99999	Invalid function

Setting Zero current detection

◆ Assuming that the inverter is fully loaded at the rated value and the current is 20A and 03-23=5% and 03-24(P.63)=0.5s, the OMD will output a signal when the output current is less than 20×5%=1A and exceeds 0.5s, as shown in the following figure:

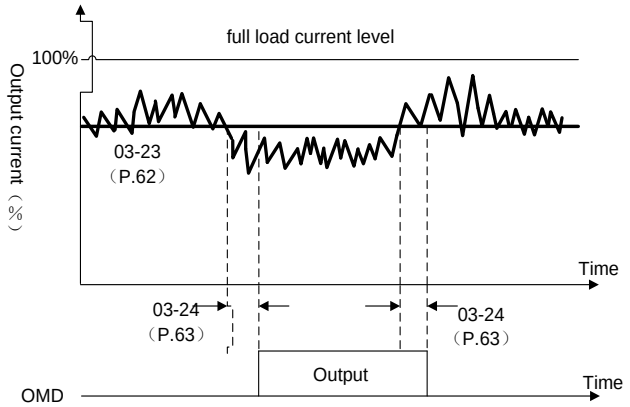

◆ If the setting value of 03-23(P.62) or 03-24(P.63) is 99999, the zero current detection function will be invalid.

Note: OMD mentioned in this paragraph is the functional names of “multi-function digital output terminals”. Please refer to 03-10~03-13(P.40, P.85, P.129, P.130) for functional selection and usage of multi-function digital output terminals. Please refer to section 3.5 for relevant wiring.

5.4.9 Function selection of expanded digital input terminal

➢ It changes the function of each expanded digital input terminal through parameter selection.

Parameter	Name	Default	Setting range	Content
03-25 P.551	M10 input function selection	99999	The same as 03-00(P.83)	The same as 03-00(P.83)
03-26 P.552	M11 input function selection	99999	The same as 03-00(P.83)	The same as 03-00(P.83)
03-27 P.553	M12 input function selection	99999	The same as 03-00(P.83)	The same as 03-00(P.83)
03-28 P.554	M13 input function selection	99999	The same as 03-00(P.83)	The same as 03-00(P.83)
03-29 P.555	M14 input function selection	99999	The same as 03-00(P.83)	The same as 03-00(P.83)
03-30 P.556	M15 input function selection	99999	The same as 03-00(P.83)	The same as 03-00(P.83)

Setting Function of expanded digital input terminal

◆ The function is the same as the digital input function, please refer to 5.4.1.

5.4.10 Expanded digital input terminal logic selection

➢ The setting of this function is bit setting. If the content of the bit is 1, it means that the action of the expanded digital input terminal is negative logic, otherwise it means that its action is positive logic.

Parameter	Name	Default	Setting range	Content
03-41 P.567	The positive and negative logic of the external digital input terminal	0	0~65535	---

Settin Input logic of expanded digital input terminal

◆ The definition of each bit in 03-41 (P.567) is as follows:

Weight number bit	2^5	2^4	2^3	2^2	2^1	2^0
	M15	M14	M13	M12	M11	M10
	SLOT expanded digital input					

5.4.11 Function selection of expanded digital output terminal

➢ It detects some information generated during the operation of the inverter.

Parameter	Name	Default	Setting range	Content
03-42 P.568	A10 output function selection	99999	The same as 03-10(P.40)	The same as 03-10(P.40)
03-43 P.569	A11 output function selection	99999	The same as 03-10(P.40)	The same as 03-10(P.40)
03-44 P.570	A12 output function selection	99999	The same as 03-10(P.40)	The same as 03-10(P.40)
03-45 P.571	A13 output function selection	99999	The same as 03-10(P.40)	The same as 03-10(P.40)
03-46 P.572	A14 output function selection	99999	The same as 03-10(P.40)	The same as 03-10(P.40)
03-47 P.573	A15 output function selection	99999	The same as 03-10(P.40)	The same as 03-10(P.40)
03-48 P.574	A16 output function selection	99999	The same as 03-10(P.40)	The same as 03-10(P.40)
03-49 P.575	A17 output function selection	99999	The same as 03-10(P.40)	The same as 03-10(P.40)

Settin Function of expanded digital output terminal

◆ The function is the same as the digital output function, please refer to 5.4.2.

5.4.12 Digital input/output terminal monitor

➢ It is used to monitor the operation of digital input and output terminal.

Parameter	Name	Default	Setting range	Content
03-59 P.585	Monitor digital input terminal status on inverter	Read only	Read only	---
03-60 P.586	Monitor digital output terminal status on and external of inverter	Read only	Read only	---
03-61 P.587	Monitor expanded digital output terminal status	Read only	Read only	---

Reading State of the digital input/output terminal

◆ For input terminals: 1 means action and 0 means off.

◆ For output terminal: 1 means action and 0 means no action.

Parameter 03-59 each corresponding input terminal:

b15	b14	b13	b12	b11	b10	b9	b8	b7	b6	b5	b4	b3	b2	b1	b0
0	0	0	0	0	0	HDI	M5	M4	M3	RES	M2	M1	M0	STR	STF

Input terminal corresponding to each bit of parameter 03-60

b15	b14	b13	b12	b11	b10	b9	b8	b7	b6	b5	b4	b3	b2	b1	b0
0	0	0	0	A17	A16	A15	A14	A13	A12	A11	A10	ABC2	SO2	ABC1	SO1

Expanded digital output

Input terminal corresponding to each bit of parameter 03-61

b15	b14	b13	b12	b11	b10	b9	b8	b7	b6	b5	b4	b3	b2	b1	b0
0	0	0	0	0	0	0	0	0	0	M15	M14	M13	M12	M11	M10

SLOT expanded digital input

Example:

Input terminal:

Set 03-00(P.83)=0 (STF) and forward signal; 03-03(P.80)=5 (M0), analog 4-5 has priority, and other terminals are set as default values. After the digital input terminals STF and M0 are closed, the inverter runs forward at a given frequency by 4-5. The status of each bit of 03-59(P.585) is as follows, indicating STF and M0 actions.

Weight number bit	b9	b8	b7	b6	b5	b4	b3	b2	b1	b0
	0	0	0	0	0	0	0	1	0	1

Therefore 03-59(P.585)= $0\times2^9 + 0\times2^8 + 0\times2^7 + 0\times2^6 + 0\times2^5 + 0\times2^4 + 0\times2^3 + 1\times2^2 + 0\times2^1 + 1\times2^0 = 5$.

Output terminal:

Set 03-42 (A10) and RUN signal detection; 03-49 (A17) is set to 2 (FU output frequency detection), and other terminals are set to default values. Insert the expansion card into the slot, and after the inverter runs to the target frequency, the status of each bit of 03-60(P.586) is shown in the following figure, indicating that A17 and A10 have outputs.

Weight number bit	b11	b10	b9	b8	b7	b6	b5	b4	b3	b2	b1	b0
	1	0	0	0	0	0	0	1	0	0	0	0

Therefore

$$03\text{-}60 = 1*2^{11} + 0*2^{10} + 0*2^{9} + 0*2^{8} + 0*2^{7} + 0*2^{6} + 0*2^{5} + 1*2^{4} + 0*2^{3} + 0*2^{2} + 0*2^{1} + 0*2^{0} = 2064$$

5.5 Multi-speed parameter group 04

Parameter group	Parameter number	Parameter name	Setting range	Default	Reference page
04-00	P.4	Speed 1 (high speed)	0~650.00Hz	60.00Hz	152
04-01	P.5	Speed 2 (medium speed)	0~650.00Hz	30.00Hz	152
04-02	P.6	Speed 3 (low speed)	0~650.00Hz	10.00Hz	152
04-03	P.24	Speed 4	0~650.00Hz 99999: Invalid function	99999	152
04-04	P.25	Speed 5	The same as 04-03(P.24)	99999	152
04-05	P.26	Speed 6	The same as 04-03(P.24)	99999	152
04-06	P.27	Speed 7	The same as 04-03(P.24)	99999	152
04-07	P.142	Speed 8	The same as 04-03(P.24)	99999	152
04-08	P.143	Speed 9	The same as 04-03(P.24)	99999	152
04-09	P.144	Speed 10	The same as 04-03(P.24)	99999	152
04-10	P.145	Speed 11	The same as 04-03(P.24)	99999	152
04-11	P.146	Speed 12	The same as 04-03(P.24)	99999	152
04-12	P.147	Speed 13	The same as 04-03(P.24)	99999	152
04-13	P.148	Speed 14	The same as 04-03(P.24)	99999	152
04-14	P.149	Speed 15	The same as 04-03(P.24)	99999	152
04-15	P.100	Selection of minute or second	0: select minute as the time increment 1: select second as the time increment	1	154
04-16	P.121	Running direction of each speed segment	0~255	0	154
04-17	P.122	Cyclical selection	0: No cycle 1~8: Start cycle from the set segment	0	154
04-18	P.123	Selection of acceleration and deceleration time	0: The acceleration time is determined by the set value of 01-06 (P.7) and deceleration time is determined by the set value of 01-07 (P.8) 1: the acceleration time and deceleration time are both determined by 04-35 (P.111)~04-42 (P.118)	0	154
04-19	P.131	Programmed operation mode speed 1	0~650.00Hz	0.00 Hz	154
04-20	P.132	Programmed operation mode speed 2	0~650.00Hz	0.00 Hz	154
04-21	P.133	Programmed operation mode speed 3	0~650.00Hz	0.00 Hz	154
04-22	P.134	Programmed operation mode speed 4	0~650.00Hz	0.00 Hz	154
04-23	P.135	Programmed operation mode speed 5	0~650.00Hz	0.00 Hz	154
04-24	P.136	Programmed operation mode speed 6	0~650.00Hz	0.00 Hz	154
04-25	P.137	Programmed operation mode speed 7	0~650.00Hz	0.00 Hz	154
04-26	P.138	Programmed operation mode speed 8	0~650.00Hz	0.00 Hz	154
04-27	P.101	Running time of programmed operation mode speed 1	0~6000.0s	0.0s	154
04-28	P.102	Running time of programmed operation mode speed 2	0~6000.0s	0.0s	154
04-29	P.103	Running time of programmed operation mode speed 3	0~6000.0s	0.0s	154
04-30	P.104	Running time of programmed operation mode speed 4	0~6000.0s	0.0s	154

Parameter group	Parameter number	Parameter name	Setting range	Default	Reference page
04-31	P.105	Running time of programmed operation mode speed 5	0~6000.0s	0.0s	154
04-32	P.106	Running time of programmed operation mode speed 6	0~6000.0s	0.0s	154
04-33	P.107	Running time of programmed operation mode speed 7	0~6000.0s	0.0s	154
04-34	P.108	Running time of programmed operation mode speed 8	0~6000.0s	0.0s	155
04-35	P.111	Acceleration and deceleration time of programmed operation mode speed 1	0~600.00s/0~6000.0s	0.00s	155
04-36	P.112	Acceleration and deceleration time of programmed operation mode speed 2	0~600.00s/0~6000.0s	0.00s	155
04-37	P.113	Acceleration and deceleration time of programmed operation mode speed 3	0~600.00s/0~6000.0s	0.00s	155
04-38	P.114	Acceleration and deceleration time of programmed operation mode speed 4	0~600.00s/0~6000.0s	0.00s	155
04-39	P.115	Acceleration and deceleration time of programmed operation mode speed 5	0~600.00s/0~6000.0s	0.00s	155
04-40	P.116	Acceleration and deceleration time of programmed operation mode speed 6	0~600.00s/0~6000.0s	0.00s	155
04-41	P.117	Acceleration and deceleration time of programmed operation mode speed 7	0~600.00s/0~6000.0s	0.00s	155
04-42	P.118	Acceleration and deceleration time of programmed operation mode speed 8	0~600.00s/0~6000.0s	0.00s	155

5.5.1 16 Speeds

➢ With the combination of digital input terminals RL, RM, RH and REX, segment speeds operation can be selected (up to 16 speeds)

Parameter	Name	Default	Setting range	Content
04-00 P.4	Speed 1 (high speed)	60.00Hz	0~650.00Hz	---
04-01 P.5	Speed 2 (medium speed)	30.00Hz	0~650.00Hz	---
04-02 P.6	Speed 3 (low speed)	10.00Hz	0~650.00Hz	---
04-03 P.24	Speed 4	99999	0~650.00Hz	---
			99999	Invalid function
04-04 P.25	Speed 5	99999	The same as 04-03(P.24)	The same as 04-03(P.24)
04-05 P.26	Speed 6	99999	The same as 04-03(P.24)	The same as 04-03(P.24)
04-06 P.27	Speed 7	99999	The same as 04-03(P.24)	The same as 04-03(P.24)
04-07 P.142	Speed 8	99999	The same as 04-03(P.24)	The same as 04-03(P.24)
04-08 P.143	Speed 9	99999	The same as 04-03(P.24)	The same as 04-03(P.24)
04-09 P.144	Speed 10	99999	The same as 04-03(P.24)	The same as 04-03(P.24)
04-10 P.145	Speed 11	99999	The same as 04-03(P.24)	The same as 04-03(P.24)
04-11 P.146	Speed 12	99999	The same as 04-03(P.24)	The same as 04-03(P.24)
04-12 P.147	Speed13	99999	The same as 04-03(P.24)	The same as 04-03(P.24)
04-13 P.148	Speed 14	99999	The same as 04-03(P.24)	The same as 04-03(P.24)
04-14 P.149	Speed 15	99999	The same as 04-03(P.24)	The same as 04-03(P.24)

Setting 16 speeds

◆ When all the set values of 04-03(P.24)~04-06(P.27) and 04-07(P.142)~04-14(P.149) are not 99999, it is “16-speed operation”, which means that there are 16 speeds in combination with RL, RM, RH and REX. The target frequency setting of the inverter is shown in the following figure:

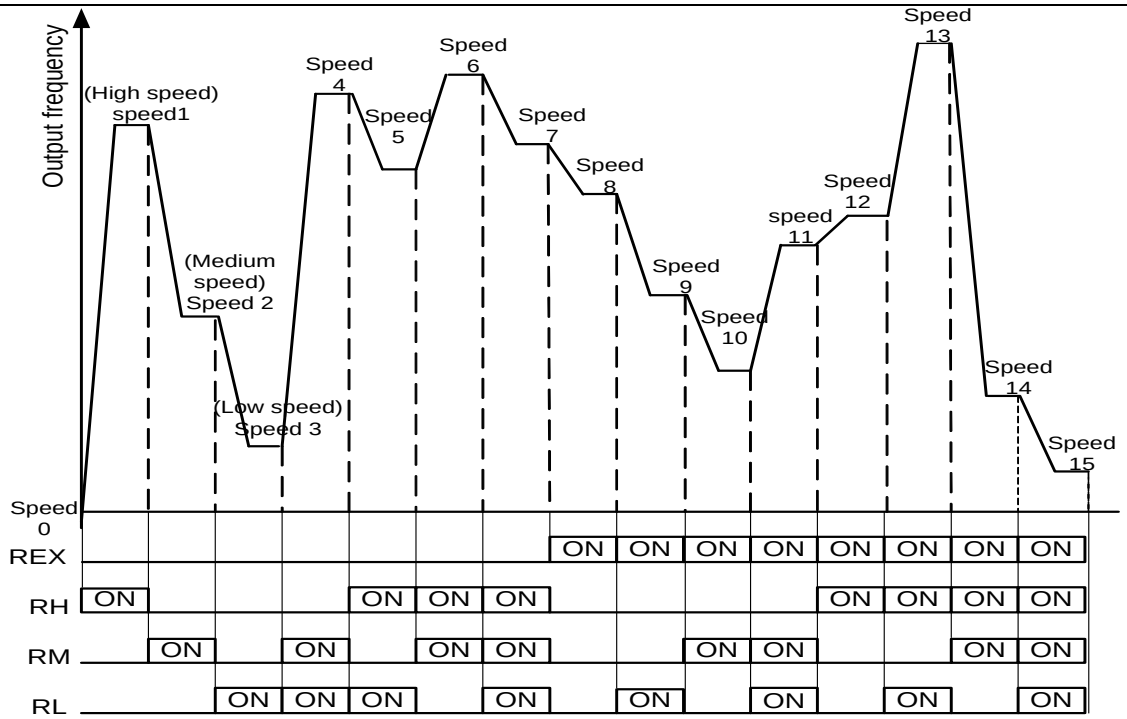

◆ When the set value of parameters 04-03(P.24)~04-06(P.27), 04-07(P.142)~04-14(P.149) is 99999, the target frequency is determined by the speed of RL, RM and RH, which is shown as below (the priority of terminals is RL>RM>RH) :

Parameter / Target Frequency	04-03 (P.24)= 99999	04-04 (P.25)= 99999	04-05 (P.26)= 99999	04-06 (P.27)= 99999	04-07 (P.142)= 99999	04-08 (P.143)= 99999	04-09 (P.144)= 99999	04-10 (P.145)= 99999	04-11 (P.146)= 99999	04-12 (P.147)= 99999	04-13 (P.148)= 99999	04-14 (P.149)= 99999
RL(04-02)	○	○		○	○	○		○		○		○
RM(04-01)			○				○				○	
RH(04-00)									○			

For example, when 04-05(P.25)=99999, the target frequency will be determined by RM (the set value of 04-01(P.5)).

Note: 1. Only in “External Mode”, “Mixed Mode 2” or “Mixed Mode 4”, can the multi-speed be used to set the target frequency of the inverter.

2. RL, RM, RH and REX mentioned in this paragraph are the functional names of “multi-function digital input terminals” (For example: 03-03(P.80)=2 means that M0 terminal is selected as RL function). Please refer to 03-00~03-09(P.80~P.84、P.86、P.126~P.128、P.550) for function selection and usage of multi-function digital input terminals. Please refer to section 3.5 for relevant wiring.

5.5.2 Programmed running mode

- This parameter can be applied to the running process control of general small machinery, food processing machinery and washing equipment. This mode can replace some traditional control circuits such as relays, switches, timers, etc.

Parameter	Name	Default	Setting range	Content
04-15 P.100	Selection of time increment	1	0	Select minute as the time increment
			1	Select second as the time increment
04-16 P.121	Selection of running direction for each segment	0	0~255	---
04-17 P.122	Cyclical selection	0	0	No cycle
			1~8	Start cycle from the set segment
04-18 P.123	Selection of acceleration and deceleration time	0	0	The acceleration time is determined by the set value of 01-06 (P.7) and deceleration time is determined by the set value of 01-07 (P.8)
			1	The acceleration time and deceleration time are both determined by 04-35 (P.111)~04-42 (P.118)
04-19 P.131	Programmed operation mode speed 1	0.00Hz	0~650.00Hz	---
04-20 P.132	Programmed operation mode speed 2	0.00Hz	0~650.00Hz	---
04-21 P.133	Programmed operation mode speed 3	0.00Hz	0~650.00Hz	---
04-22 P.134	Programmed operation mode speed 4	0.00Hz	0~650.00Hz	---
04-23 P.135	Programmed operation mode speed 5	0.00Hz	0~650.00Hz	---
04-24 P.136	Programmed operation mode speed 6	0.00Hz	0~650.00Hz	---
04-25 P.137	Programmed operation mode speed 7	0.00Hz	0~650.00Hz	---
04-26 P.138	Programmed operation mode speed 8	0.00Hz	0~650.00Hz	---
04-27 P.101	Running time of programmed operation mode speed 1	0.0s	0~6000.0s	---
04-28 P.102	Running time of programmed operation mode speed 2	0.0s	0~6000.0s	---
04-29 P.103	Running time of programmed operation mode speed 3	0.0s	0~6000.0s	---
04-30 P.104	Running time of programmed operation mode speed 4	0.0s	0~6000.0s	---
04-31 P.105	Running time of programmed operation mode speed 5	0.0s	0~6000.0s	---
04-32 P.106	Running time of programmed operation mode speed 6	0.0s	0~6000.0s	---
04-33 P.107	Running time of programmed operation mode speed 7	0.0s	0~6000.0s	---

Parameter	Name	Default	Setting range	Content
04-34 P.108	Running time of programmed operation mode speed 8	0.0s	0~6000.0s	---
04-35 P.111	Acceleration and deceleration time of programmed operation mode speed 1	0.00s	0~600.00s/ 0~6000.0s	---
04-36 P.112	Acceleration and deceleration time of programmed operation mode speed 2	0.00s	0~600.00s/ 0~6000.0s	---
04-37 P.113	Acceleration and deceleration time of programmed operation mode speed 3	0.00s	0~600.00s/ 0~6000.0s	---
04-38 P.114	Acceleration and deceleration time of programmed operation mode speed 4	0.00s	0~600.00s/ 0~6000.0s	---
04-39 P.115	Acceleration and deceleration time of programmed operation mode speed 5	0.00s	0~600.00s/ 0~6000.0s	---
04-40 P.116	Acceleration and deceleration time of programmed operation mode speed 6	0.00s	0~600.00s/ 0~6000.0s	---
04-41 P.117	Acceleration and deceleration time of programmed operation mode speed 7	0.00s	0~600.00s/ 0~6000.0s	---
04-42 P.118	Acceleration and deceleration time of programmed operation mode speed 8	0.00s	0~600.00s/ 0~6000.0s	---

Setting Programmed operation mode

◆ Programmed operation mode

1. The calculation method of running time and acceleration/deceleration time for each speed is shown in the following figure:

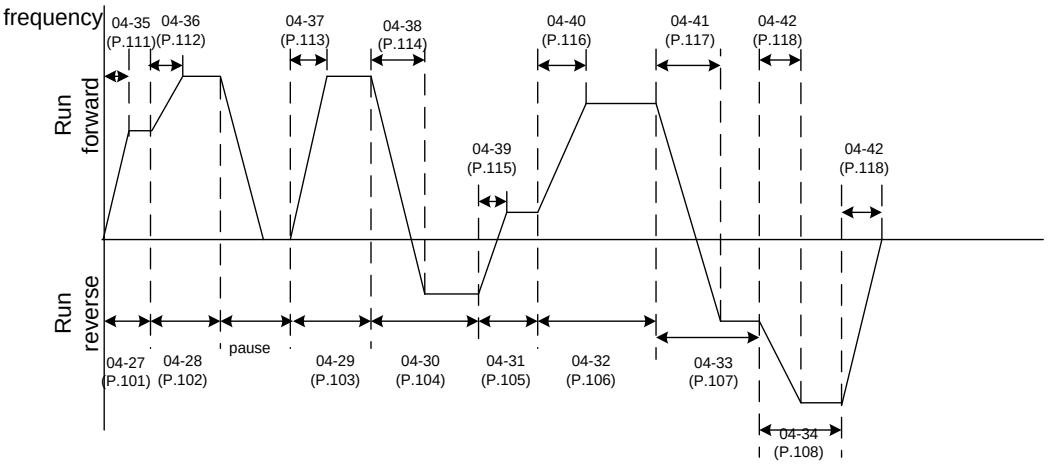

2. Setting method of operation direction: setting in binary 8bit mode, then converting into decimal mode and inputting into parameter 04-16(P.121). Wherein, 1 means forward rotation, 0 means reverse rotation, the highest bit is the direction of speed 8, and the lowest bit is the direction of speed 1.
   For example, if speed 1 is forward rotation, speed 2 is reverse rotation, speed 3 is reverse rotation, speed 4 is forward rotation, speed 5 is reverse rotation, speed 6 is forward rotation, speed 7 is forward rotation, and speed 8 is reverse rotation, then the binary number is 01101001.
   04-16(P.121) = $0\times2^7+1\times2^6+1\times2^5+0\times2^4+1\times2^3+0\times2^2+0\times2^1+1\times2^0 = 105$

3. When 04-16(P.121)=0, there will be no cycle operation.
4. When 04-17(P.122)=1~8, it refers to the initial speed when starting the cycle operation.
   For example, if 04-17(P.122)=3, the cycle operation will start from speed 3 after the speed 1 to speed 8 operations have been completed.
5. If 04-18(P.123)=0, the acceleration time is determined by the set value of 01-06(P.7) and the deceleration time is determined by the set value of 01-07(P.8).
6. If 04-18(P.123)=1, the acceleration and deceleration time are both determined by 04-35(P.111)~04-42(P.118). If the value in 04-35(P.111)~04-42(P.118) is set to 0, the acceleration time shall be subject to the set value of 01-06(P.7) and 01-07(P.8).

◆ Manual cycle mode

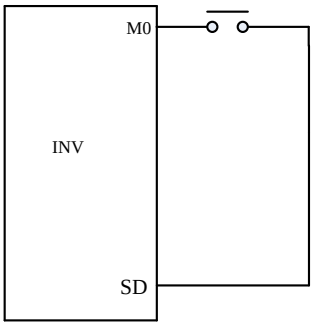

Manual cycle setting wiring diagram

1. Connect a pulse switch between M0 and SD.
2. After the inverter is powered on, set the corresponding parameter 03-03(P.80) as 35 according to the connection terminals. At this time, the inverter is in a shutdown and standby state.
3. The operation mode is as shown in the following figure:

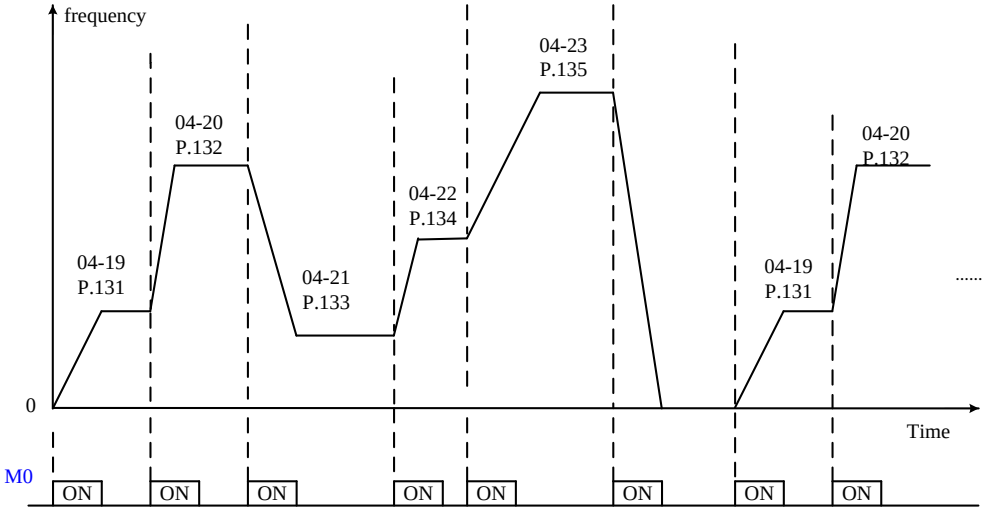

Note: 1. The program can run at most 8 speeds, which are set by 04-19(P.131)~04-26(P.138).
2. The settings of parameters 04-15(P.100)~04-18(P.123) and 04-27(P.101)~04-42(P.118) are only valid for the programmed operation mode and have nothing to do with the manual cycle mode. For the acceleration and deceleration time of manual cycle mode, please refer to the method of 01-06(P.7), 01-07(P.8), 01-22(P.44) and 01-23(P.45).
3. If any segment is set to zero during the setting process, the inverter will return to the shutdown and standby state when running to this segment. This means that when this mode is selected, 04-19(P.131) cannot be 0. As shown in the above diagram, if 04-24(P.136) is 0, regardless of the values of 04-25(P.137) and 04-26(P.138), the inverter will stop running when the switch is pressed for the sixth time.
4. The rotation direction of the manual cycle function is a single direction, which has nothing to do with the operation direction parameter 04-16(P.121) of each speed in the programmed operation mode, and has nothing

to do with STF and STR signals.

5. For the setting of 04-35(P.111)~04-42(P.118), please refer to the method of acceleration and deceleration time increments of parameter 01-08(P.21).

5.6 Motor parameter group 05

Parameter group	Parameter number	Parameter name	Setting range	Default	Reference page
05-00	P.301	Automatic measurement of motor parameters	0: No motor parameter automatic measurement function 1: Automatic measurement of induction motor parameters 1, during which the motor is running. 2: Automatic measurement of induction motor parameters 2, during which the motor is not running. 3: On-line automatic measurement function of induction motor 5: Automatic measurement of induction motor parameters 3, during which the motor is not running. 8: Automatic measurement of synchronous motor parameters	0	160
05-01	P.302	Rated power of motor	0~650.00kW	0.00kW	162
05-02	P.303	Pole number of motor	0~256	4	162
05-03	P.304	Rated voltage of motor	440 voltage range	440V	162
05-04	P.305	Rated frequency of motor	50Hz system setting: 0~650.00Hz	50.00Hz	162
			60Hz system setting: 0~650.00Hz	60.00Hz	
05-05	P.306	Rated current of motor	0~500.00A : Types below Frame G	According to type	162
			0~5000.0A: Frame G and types above		
05-06	P.307	Rated rotation speed of motor	50Hz system setting: 0~65000r/min	1410r/min	162
			60Hz system setting: 0~65000r/min	1710r/min	
05-07	P.308	Excitation current of motor	0~500.00A: Types below Frame G	According to type	162
			0~5000.0A: Frame G and types above		
05-08	P.309	IM motor stator resistance	0~65000mΩ: 55K/45KG and types below	According to type	162
			0~650.00mΩ: 75K/55KG and types above		
05-09	P.310	IM motor rotor resistance	0~65000mΩ: 55K/45KG and types below	According to type	162
			0~650.00mΩ: 75K/55KG and types above		
05-10	P.311	IM motor leakage inductance	0~6500.0mH: 55K/45KG and types below	According to type	162
			0~650.00mH: 75K/55KG and types above		
05-11	P.312	IM motor mutual inductance	0~6500.0mH: 55K/45KG and types below	According to type	162
			0~650.00mH: 75K /55KG and types above		
05-12	P.313	PM motor stator resistance	0~65000mΩ: 55K/45KG and types below	According to type	162
			0~650.00mΩ: 75K/55KG and types above		
05-13	P.314	PM motor d-axis inductance	0~650.00mH	According to type	162
05-14	P.315	PM motor q-axis inductance	0~650.00mH	According to type	162
05-15	P.316	PM motor Back-EMF coefficient	0~6500.0V/krpm	According to type	162
05-17	P.318	Rotary inertia	0~6.5000kg.m2: 7.5K/5.5KG and types below	According to type	162
			0~65.000kg.m2: 11K/7.5KG~110K/ 90KG types		
			0~650.00kg.m2: 132K/110KG and types above		
05-18	P.319	Load inertia ratio	0~600.0	1.0	162

Parameter group	Parameter number	Parameter name	Setting range	Default	Reference page
05-22	P.332	Rated power of motor 2	0~650.00kW 99999	99999	163
05-23	P.333	Pole number of motor 2	0~256 99999	99999	163
05-24	P.334	Rated voltage of motor 2	440 voltage range 99999	99999	163
05-25	P.335	Rated frequency of motor 2	0~650.00Hz 99999	99999	163
05-26	P.336	Rated current of motor 2	0~500.00A:Types below Frame G 0~5000.0A: Frame G and types above 99999	99999	163
05-27	P.337	Rated rotation speed of motor Rated rotation speed of motor 2	0~65000r/min 99999	99999	164
05-28	P.338	Excitation current of motor 2	0~500.00A: Types below Frame G 0~5000.0A: Frame G and types above 99999	99999	164
05-29	P.339	(IM) stator resistance of motor 2	0~65000mΩ: 55K/45KG and types below 0~650.00mΩ: 75K/55KG and types above 99999	99999	164
05-30	P.340	(IM) rotor resistance of motor 2	0~65000mΩ: 55K/45KG and types below 0~650.00mΩ: 75K/55KG and types above 99999	99999	164
05-31	P.341	(IM) leakage inductance of motor 2	0~6500.0mH: 55K/45KG and types below 0~650.00mH: 75K/55KG and types above 99999	99999	164
05-32	P.342	(IM) mutual inductance of motor 2	0~6500.0mH: 55K/45KG and types below 0~650.00mH: 75K/55KG and types above 99999	99999	164
05-33	P.343	(PM) stator resistance of motor 2	0~65000mΩ: 55K/45KG and types below 0~650.00mΩ: 75K/55KG and types above 99999	99999	164
05-34	P.344	(PM) stator resistance of motor 2	0~650.00mH 99999	99999	164
05-35	P.345	(PM) stator resistance of motor 2	0~650.00mH 99999	99999	164
05-36	P.346	(PM) Back-EMF coefficient of motor 2	0~6500.0V/krpm 99999 99999	99999	164
05-38	P.394	Inertia of motor 2	0~6.5000kg.m²: 7.5K/5.5KG and types below 0~65.000kg.m²: 11K/7.5KG~110K/ 90KG types 0~650.00kg.m²: 132K/110KG and types above 99999	99999	164
05-39	P.395	Load inertia ratio of motor 2	0~600.0 99999	99999	164

5.6.1 Automatic measurement of motor parameters

➢ High performance vector control of the motor can be realized through accurate automatic measurement of motor parameters.

Parameter	Name	Default	Setting range	Content
05-00 P.301	Automatic measurement of motor parameters	0	0	No motor parameter automatic measurement function
			1	Automatic measurement of induction motor parameters 1, during which the motor is running.
			2	Automatic measurement of induction motor parameters 2, during which the motor is not running.
			3	On-line automatic measurement function of induction motor
			5	Automatic measurement of induction motor parameters 3, during which the motor is not running.
			8	Automatic measurement of synchronous motor parameters

Setting Automatic measurement of motor parameters

- If 00-21(P.300)=0, it can operate normally according to V/F curve without automatic measurement of motor parameters.
- When controlling the general flux vector of IM motor, please set 00-21(P.300) as 2. At this time, the voltage will increase to compensate for the frequency change when the motor load increases.
- In order to implement the IM motor parameter automatic measurement function, it is necessary to set 05-00(P.301) as 1, 2 or 5, and press the forward or reverse rotation key. In the course of measurement, the keypad - will flash and display “TUN”. If the measurement result fails, the keypad - will flash “FAL” for three seconds and restore normal display.
- The automatic measurement of IM motor parameters includes the following steps:

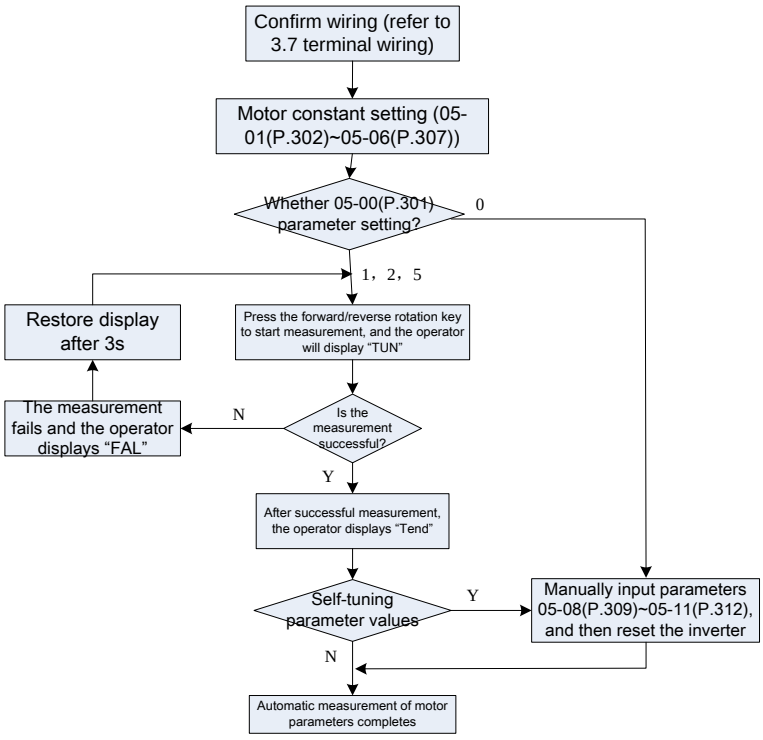

- When setting 00-21(P.300)=6, please be sure to set the PM motor parameters correctly and perform the automatic measurement function of PM motor parameters, so as to ensure the control stability and dynamic response.

- The automatic measurement of PM motor parameters includes the following steps:

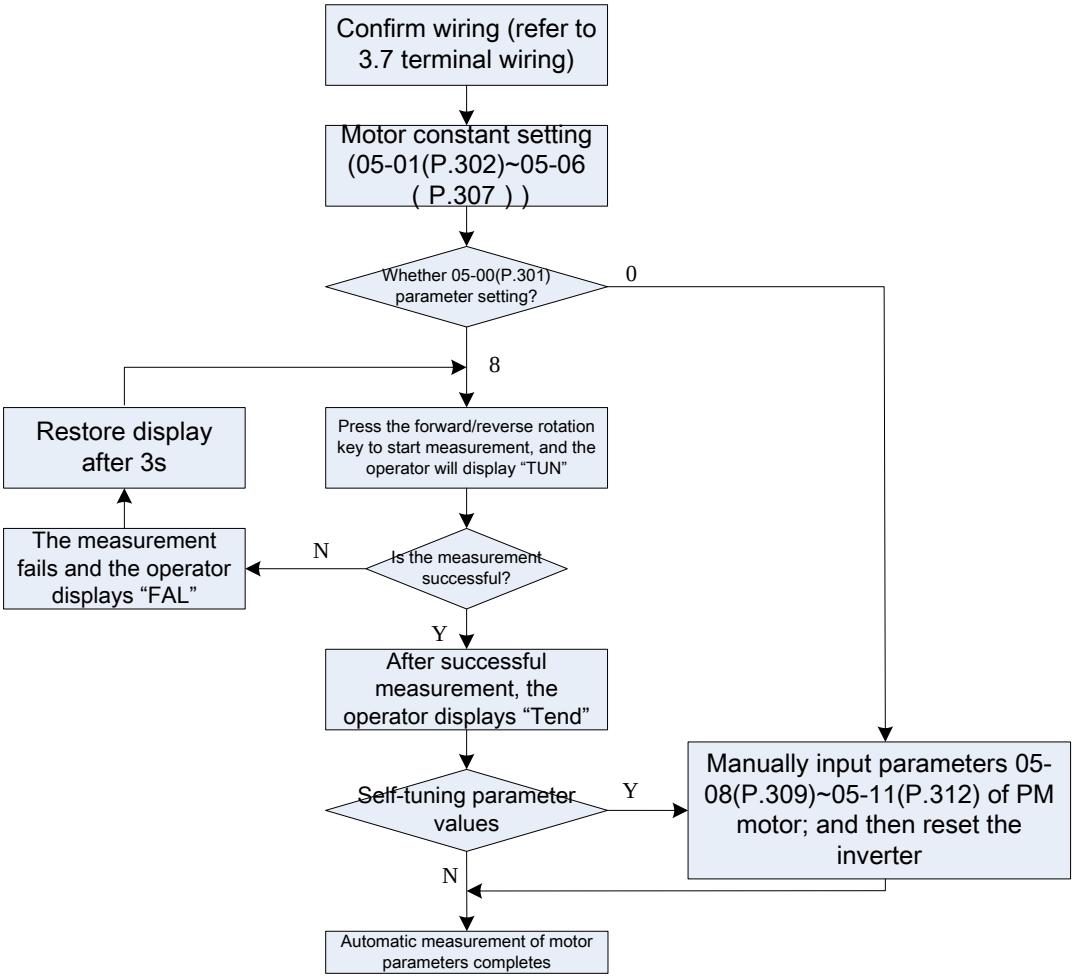

- If IM motor needs high precision sensorless control, please set 05-00(P.301) to 3 sensorless vector control

Note: 1. The motor capacity must be the same level or lower level as the inverter capacity.

2. When performing IM motor automatic measurement function, if the motor is allowed to rotate, please set 05-00(P.301) =1 (dynamic measurement), and at this time, the load must be completely separated from the motor. If the load environment does not allow Auto-tuning and motor rotation during automatic measurement, please set 05-00(P.301) =2 or 5 (static measurement).

3. IM motor sensorless vector control process: the control performance can be enhanced by the function of Auto-tuning. Before setting 05-00(P.301) =3, please set the motor parameters first, and then perform the Auto-tuning function to increase the control accuracy.

5.6.2 Motor parameter

- The inverter has built-in standard parameters for adapting the motor. It is necessary to identify the motor parameters or modify the default values according to the actual situation to conform to the actual values as much as possible.

Parameter	Name	Default	Setting range	Content
05-01 P.302	Rated power of motor	0.00kW	0~650.00kW	---
05-02 P.303	Pole number of motor	4	0~256	---
05-03 P.304	Rated voltage of motor	440V	0~510V	440V voltage range
05-04 P.305	Rated frequency of motor	50.00Hz	0~650.00Hz	50Hz system setting (00-24(P.189)=1)
		60.00Hz		60Hz system setting (00-24(P.189)=0)
05-05 P.306	Rated current of motor	Determined by type	0~500.00A	Types below frame G
			0~5000.0A	Frame G and types above
05-06 P.307	Rated rotation speed of motor	1410r/min	0~65000r/min	50Hz system setting (00-24(P.189)=1)
		1710r/min		60Hz system setting (00-24(P.189)=0)
05-07 P.308	Excitation current of motor	Determined by type	0~500.00A	Types below frame G
			0~5000.0A	Frame G and types above
05-08 P.309	IM motor stator resistance	Determined by type	0~65000mΩ	55K/45KG and types below
			0~650.00mΩ	75K/55KG and types above
05-09 P.310	IM motor rotor resistance	Determined by type	0~65000mΩ	55K/45KG and types below
			0~650.00mΩ	75K/55KG and types above
05-10 P.311	IM motor leakage inductance	Determined by type	0~6500.0mH	55K/45KG and types below
			0~650.00mH	75K/55KG and types above
05-11 P.312	IM motor mutual inductance	Determined by type	0~6500.0mH	55K/45KG and types below
			0~650.00mH	75K/55KG and types above
05-12 P.313	PM motor stator resistance	Determined by type	0~65000mΩ	55K/45KG and types below
			0~650.00mΩ	75K/55KG and types above
05-13 P.314	PM motor d-axis inductance	Determined by type	0~650.00mH	---
05-14 P.315	PM motor q-axis inductance	Determined by type	0~650.00mH	---
05-15 P.316	PM motor Back-EMF coefficient	Determined by type	0~6500.0V/krpm	---
05-17 P.318	Rotary inertia	Determined by type	0~6.5000kg.m^2	7.5K/5.5KG and types below
			0~65.000kg.m^2	11K/7.5KG~ 90K/75KG type
			0~650.00kg.m^2	132K/110KG and types above
05-18 P.319	Load inertia ratio	1.0	0~600.0	0~600.0

Setting Motor parameter

- If the IM motor can be completely disconnected from the load, select 05-00(P.301) =1, and during the operation of the motor, the motor parameters will be auto-tuning. Then press the FWD or REV on the keypad, and the inverter will automatically calculate the following parameters: 05-07(P.308) ~05-11(P.312).
- If the IM motor cannot be completely separated from the load, select 05-00(P.301) =2, and during the stop of the motor, the motor parameters will be auto-tuning. Then press the FWD or REV on the keypad, and the inverter will automatically calculate the following parameters: 05-07(P.308) ~05-11(P.312).
- Users can also calculate this two parameters according to the motor nameplate, among which the parameters of the motor nameplate used are: rated voltage U, rated current I, rated frequency f and power factor η..
- The calculation method of no-load excitation current and mutual inductance of the motor is as follows, where L_δ is leakage inductance of the motor.
- No-load current: $I_0 = I \times \sqrt{1-\eta^2}$, Mutual inductance: $L_m = \frac{U}{2\sqrt{3}\cdot\pi\cdot f\cdot I_0} - L_\delta$, among which I_0 is no-load current, L_m is mutual inductance, and L_δ is leakage inductance.
- When performing the PM motor parameter auto-tuning, select 05-00(P.301) =8 and press the FWD or REV on the keypad to perform the PM motor parameter auto-tuning. The inverter will automatically calculate the following parameters: 05-12(P.313) ~05-15 (P.316).

Note: 1. When the inverter is used with motors of different grades, please be sure to confirm to input the nameplate parameters 05-01(P.302) ~05-06(P.307) of motor first. Vector control method relies heavily on motor parameters, so in order to obtain good control performance, accurate parameters of the controlled motor must be obtained.
2. If any one or more parameter values of 05-01(P.302) ~05-11(P.312) have been manually modified, reset the inverter to reload the new parameter values.

5.6.3 The second motor parameter

- By setting the second motor parameter and matching the digital input terminal, the auto-tuning function of the second motor parameters can be performed

Parameter group	Parameter number	Parameter name	Setting range	Default
05-22 P.332	Rated power of motor 2	99999	0~650.00kW	---
			99999	Not selected
05-23 P.333	Pole number of motor 2	99999	0~256	---
			99999	Not selected
05-24 P.334	Rated voltage of motor 2	99999	0~510V	440 voltage range
			99999	
05-25 P.335	Rated frequency of motor 2	99999	0~650.00Hz	---
			99999	Not selected
05-26 P.336	Rated current of motor 2	99999	0~500.00A	Types below Frame G
			0~5000.0A	Frame G and types above
			99999	Not selected

Parameter group	Parameter number	Parameter name	Setting range	Default
05-27 P.337	Rated rotation speed of motor 2	99999	0~65000r/min	---
			99999	Not selected
05-28 P.338	Excitation current of motor 2	99999	0~500.00A	Types below frame G
			0~5000.0A	Frame G and types above
			99999	Not selected
05-29 P.339	Stator resistance of (IM) motor 2	99999	0~65000mΩ	55K/45KG and types below
			0~650.00mΩ	75K/55KG and types above
			99999	Not selected
05-30 P.340	Rotor resistance of (IM) motor 2	99999	0~65000mΩ	55K/45KG and types below
			0~650.00mΩ	75K/55KG and types above
			99999	Not selected
05-31 P.341	Leakage inductance of (IM) motor 2	99999	0~6500.0mH	55K/45KG and types below
			0~650.00mH	75K/55KG and types above
			99999	Not selected
05-32 P.342	Mutual inductance of (IM) motor 2	99999	0~6500.0mH	55K/45KG and types below
			0~650.00mH	75K/55KG and types above
			99999	Not selected
05-33 P.343	Stator resistance of (PM) motor 2	99999	0~65000mΩ	55K/45KG and types below
			0~650.00mΩ	75K/55KG and types above
			99999	Not selected
05-34 P.344	D-axis inductance of (PM) motor 2	99999	0~650.00Mh	Determined by type
			99999	Not selected
05-35 P.345	Q-axis inductance of (IM) motor 2	99999	0~650.00mH	Determined by type
			99999	Not selected
05-36 P.346	Back-EMF coefficient of (PM) motor 2	99999	0~6500.0V/krpm	Determined by type
			99999	Not selected
05-38 P.394	Inertia of motor 2	99999	0~6.5000kg.m2	7.5K/5.5KG and types below
			0~65.000kg.m2	11K/7.5KG~90K/75KG types
			0~650.00kg.m2	132K/110KG and types above
			99999	Not selected
05-39 P.395	Load inertia ratio of motor 2	99999	0~600.0	---
			99999	Not selected

Setting The second motor parameter

- If 00-22(P.370)≠99999 and RT signal is ON, the second motor parameters 05-22(P.332) ~05-39(P.395) are valid. Please refer to 5.2.10 for the second functional parameter.
- For the use of the second motor parameters, please refer to the motor parameter settings of 05-01(P.302) ~05-17(P.318).

5.7 Protection parameter group 06

Parameter group	Parameter number	Parameter name	Setting range	Default	Reference page
06-00	P.9	Electronic thermal relay capacity	0~500.00A: Types below frame G 0~5000.0A: Frame G and types above	According to type	169
06-01	P.22	Stall prevention operation level	0~200.0%	120.0%	169
06-02	P.23	Level reduction correction factor	0~150.0% 99999: stall prevention level is set value of 06-01 (P.22)	99999	169
06-03	P.66	Stall prevention operation reduction starting frequency	50Hz system setting: 0~650.00Hz 60Hz system setting: 0~650.00Hz	50.00Hz 60.00Hz	169
06-04	P.220	Selection of acceleration and deceleration time when current stalling	0: According to the current acceleration and deceleration time 1: According to the first acceleration and deceleration time 2: According to the second acceleration and deceleration time 3: Automatically calculate the best acceleration and deceleration time	3	169
06-05	P.30	Function selection of regenerative braking	0: The usage rate of regenerative braking is fixed at 3%, and parameter 06-06(P.70) is invalid 1: The usage rate of regenerative braking is the set value of 06-06(P.70) 2: Protection function of external brake unit (D frame and above)	0 2	171
06-06	P.70	Special regenerative braking rate	0~100.0%	0.0%	171
06-07	P.263	Decrease carrier protection setting	0: Fixed carrier frequency, and limit the load current according to the set carrier. 1: Fixed rated current, and limit the carrier according to the load current and temperature.	0	171
06-08	P.155	Over torque detection level	0~200.0%	0.0%	173
06-09	P.156	Over torque detection time	0.1~60.0s	1.0s	173
06-10	P.260	Action selection of over torque detection	0: OL2 alarm will not be reported after over torque detection, and operation will continue 1: OL2 alarm will be reported after over torque detection, and operation will stop	1	173
06-11	P.160	Stall level when restart	0~150.0%	100.0%	173
06-12	P.245	Cooling fan operation mode	0: When running, the fan is ON, and after stopping for 30S, the fan is OFF 1: When power-on, the fan is always ON, and when power-off, the fan is OFF 2: During operation, if the heat sink temperature is greater than 60℃, the fan is ON; If less than 40℃, the fan is OFF;; When stopped, the fan is OFF 3: If the temperature value of the heat sink is greater than 60℃, the fan is ON; If it is less than 40℃, the fan is OFF.	0	174
06-13	P.281	Input phase failure protection	0: No input phase failure protection function 1: If the input phase fails, the keypad displays “IPF” alarm, and the inverter stops outputting	0	174
06-14	P.287	SCP short circuit protection function	0: No output side short-circuit protection function 1: If the output side is short-circuited, the keypad displays “SCP” alarm, and the inverter stops outputting	1	175
06-15	P.533	PTC alarm handling Mode	0: Warning and continue operation 1: Give abnormal warning and slow down to stop 2: Give alarm and stop freely 3: No warning	0	175
06-16	P.534	PTC level percentage	0~100.0%	0.0%	175

Parameter group	Parameter number	Parameter name	Setting range	Default	Reference page
06-17	P.261	Maintenance alarm function	0: No maintenance alarm function 1 ~ 9998day: used to set the time for maintenance alarm output signal	0	176
06-19	P.282	GF detection level in operation	315K/280KG and types below: 0~100.0% 355K/315KG types: 0~100.0%	50.0% 70.0%	176
06-20	P.262	Output phase failure protection	0: No output phase failure protection 1: If the input phase fails, the keypad displays "LF" alarm, and the inverter stops outputting	0	176
06-21	P.705	Low voltage level	310~440V: 440V type	310V	177
06-22	P.706	Regenerative brake operation level	410~800V: 440V type	720V	177
06-23	P.707	Voltage stall level	410~800V: 440V type	760V	177
06-24	P.708	Capacitor lifetime detection	0~1	0	178
06-25	P.709	Electrolytic capacitor lifetime detection level	0~100.0%	100.0%	178
06-26	P.710	Electrolytic capacitor lifetime detection result	0: No abnormal 1: Abnormal electrolytic capacitance	Read only	178
06-27	P.292	Total inverter operation time (minutes)	0~1439min	0min	179
06-28	P.293	Total inverter operation time (days)	0~9999day	0day	179
06-29	P.296	Total inverter power on time (minutes)	0~1439min	0min	179
06-30	P.297	Total inverter power on time (days)	0~9999day	0day	179
06-31	P.298	Output power (lower 16 bits)	Read only	Read only	179
06-32	P.299	Output power (higher 16 bits)	Read only	Read only	179
06-40	P.288	Alarm code query	0~12	1	180
06-41	P.289	Alarm code display	Read only	Read only	180
06-42	P.290	Alarm message query	0~10	0	180
06-43	P.291	Alarm message display	Read only	Read only	180
06-44	P.740	E1	Read only	Read only	181
06-45	P.741	E2	Read only	Read only	181
06-46	P.742	E3	Read only	Read only	181
06-47	P.743	E4	Read only	Read only	181
06-48	P.744	E5	Read only	Read only	181
06-49	P.745	E6	Read only	Read only	181
06-50	P.746	E7	Read only	Read only	181
06-51	P.747	E8	Read only	Read only	181
06-52	P.748	E9	Read only	Read only	181
06-53	P.749	E10	Read only	Read only	181
06-54	P.750	E11	Read only	Read only	181
06-55	P.751	E12	Read only	Read only	181

Parameter group	Parameter number	Parameter name	Setting range	Default	Reference page
06-56	P.752	Output frequency during E1 alarm	Read only	Read only	182
06-57	P.753	Output current during E1 alarm	Read only	Read only	182
06-58	P.754	Output voltage during E1 alarm	Read only	Read only	182
06-59	P.755	Temperature rising accumulation rate during E1 alarm	Read only	Read only	182
06-60	P.756	PN voltage during E1 alarm	Read only	Read only	182
06-61	P.757	Total inverter operation time during E1 alarm	Read only	Read only	182
06-62	P.758	Inverter operation status code during E1 alarm	Read only	Read only	182
06-63	P.759	E1 alarm date (years/months)	Read only	Read only	182
06-64	P.760	E1 alarm date (days/hours)	Read only	Read only	182
06-65	P.761	E1 alarm date (minutes/seconds)	Read only	Read only	182
06-70	P.766	Output frequency during E2 alarm	Read only	Read only	183
06-71	P.767	Output current during E2 alarm	Read only	Read only	183
06-72	P.768	Output voltage during E2 alarm	Read only	Read only	183
06-73	P.769	Temperature rising accumulation rate during E2 alarm	Read only	Read only	183
06-74	P.770	PN voltage during E2 alarm	Read only	Read only	183
06-75	P.771	Total inverter operation time during E2 alarm	Read only	Read only	183
06-76	P.772	Inverter operation status code during E2 alarm	Read only	Read only	183
06-77	P.773	E2 alarm date (years/months)	Read only	Read only	183
06-78	P.774	E2 alarm date (days/hours)	Read only	Read only	183
06-79	P.775	E2 alarm date (minutes/seconds)	Read only	Read only	183
06-84	P.1040	Fire mode	XXX0: Off (fire mode off (normal mode) XXX1:Forward operation (inverter runs forward in fire mode) XXX2:Reverse operation (inverter runs reverse in fire mode) XX0X: Bypass off (close bypass function) XX1X: Bypass on (enable bypass function) X0XX: Open loop control (inverter will speed up to fire mode frequency 06-85 (P.1041)) X1XX: Closed loop control (run in PID, PID target set in 06-87 (P.1043)) 0XXX: Manual exit fire mode (after the fire mode terminal function is off, manually reset inverter to go to normall mode) 1XXX: Auto exit fire mode (after the fire mode terminal function is off, inverter automatically return to normal mode)	0	184

Protection parameter group 06

Parameter group	Parameter number	Parameter name	Setting range	Default	Reference page
06-85	P.1041	Fire mode frequency	0~650.00Hz	60.00Hz	184
06-86	P.1042	Fire mode bypass delay	0.0~6000.0s	0.0s	184
06-87	P.1043	Fire mode PID target	0~08-43(P.251)	0.0	184
06-88	P.1044	Fire mode cumulate times	Read only	Read only	184

5.7.1 Electronic thermal relay capacity

➢ The "electronic thermal relay" is a kind of thermal relay that uses the program of inverter to simulate the thermal relay of motor, in order to avoid overheating of the motor.

Parameter	Name	Default	Setting range	Content
06-00 P.9	Electronic thermal relay capacity	Determined by type	0~500.00A	Types below frame G
			0~5000.0A	Frame G and types above

Setting Electronic thermal relay capacity

◆ Please set the value of 06-00(P.9) as the rated current value of the motor at the rated frequency. Rated frequencies of squirrel cage induction motors manufactured in different countries and regions are different. Please refer to the motor nameplate for specific data.

◆ If 06-00(P.9)=0, the function of the electronic thermal relay is invalid.

◆ When the electronic thermal relay calculates that the motor has accumulated too much heat, the keypad will display a fault code THM and the output will stop.

Note: 1. After the inverter is Reset, the heat accumulation record of the electronic thermal relay will return to zero, which should be paid attention to during use.
2. If two or more motors are connected to the inverter, the electronic thermal relay cannot be used as overheat protection for the motors. Please install external thermal relay on each motor.
3. When special motors are used, electronic thermal relay cannot be used for protection. Please install external thermal relay on the motor.
4. Please refer to 03-00~03-09(P.80~P.84、P.86、P.126~P.128、P.550) for the use and wiring method of thermal relay.

5.7.2 Current stalling protection

➢ In order to avoid the alarm and stop of the inverter due to overcurrent and overvoltage, the output current is monitored to automatically change the output frequency. It can realize stall prevention during acceleration and deceleration process or during electric regeneration, and make high response current limit valid.

Parameter	Name	Default	Setting range	Content
06-01 P.22	Stall prevention operation level	120.0%	0~200.0%	---
06-02 P.23	Level reduction correction factor	99999	0~150.0%	---
			99999	Stall prevention level is set value of 06-01 (P.22)
06-03 P.66	Stall prevention operation reduction starting frequency	50.00Hz	0~650.00Hz	50Hz system setting (00-24(P.189)=1)
		60.00Hz		60Hz system setting (00-24(P.189)=0)
06-04 P.220	Selection of acceleration and deceleration time when current stalling	3	0	According to the current acceleration and deceleration time
			1	According to the first acceleration and deceleration time
			2	According to the second acceleration and deceleration time
			3	Automatically calculate the best acceleration and deceleration time

Setting Current stalling protection

◆ In case of heavy load, when the motor starts or the target frequency changes (increases), the rotating speed of the motor often cannot keep up with the speed of the output frequency change. When the rotation speed of the motor is lower than the output frequency, the output current will increase to enhance the output torque. However, if the difference between the output frequency of the inverter and the motor speed is too large, the motor torque will be

reduced, which is called “stall”.

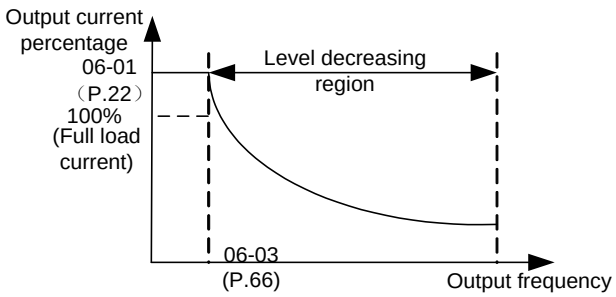

Formula for stall prevention level:

$$\text{Level percentage}=A+B\times\frac{06\text{-}01(P.22)-A}{06\text{-}01(P.22)-B}\times\frac{06\text{-}02(P.23)-100}{100}$$

$$A=\frac{(06\text{-}23(P.66))\times(06\text{-}01(P.22))}{\text{Output frequency}}\qquad B=\frac{(06\text{-}23(P.66))\times(06\text{-}01(P.22))}{400}$$

- In case of heavy load, the output current of the inverter will increase. Once the percentage of output current exceeds the curve shown in the diagram below, the inverter will reduce the output frequency according to the deceleration time selected in 06-04(P.220). After the rotation speed of the motor keeps up (the output current of the inverter will decrease accordingly), the inverter will accelerate and recover to the original output frequency (output frequency at stall) according to the acceleration time selected in 06-04(P.220), and then continue to increase the output frequency.

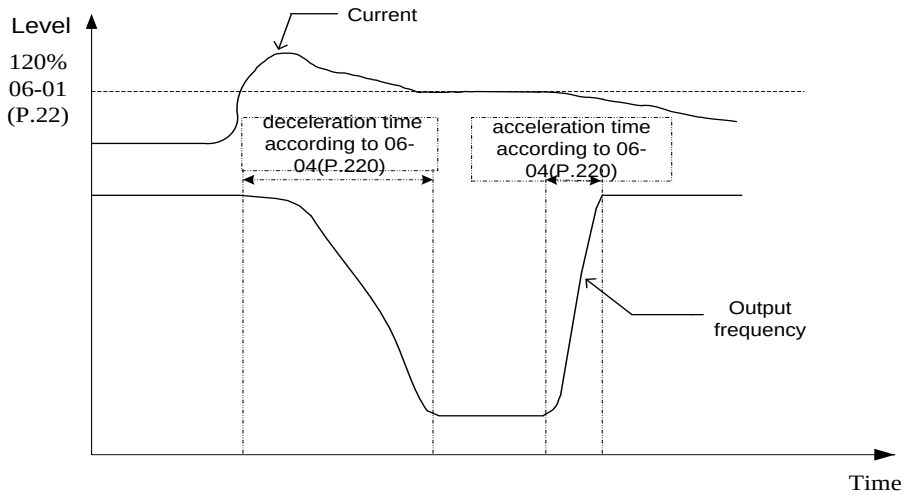

The current in the diagram refers to the amplitude of the current.

Note: 1. If 00-21(P.300)=3 sensorless vector control is selected in 00-21(P.300) control method, 06-01(P.22) will act as torque limit level operation.

2. When 06-04(P.220)=2, if 01-22(P.44) is not set, the acceleration time will be 01-06(P.7); If 01-23(P.45) is not set, the deceleration time will be 01-07(P.8).

5.7.3 Regenerative brake

➢ When frequent starting and stopping operations are carried out, the utilization rate of regenerative brake can be increased by using the braking resistor and the braking unit.

Parameter	Name	Default	Setting range	Content
06-05 P.30	Function selection of regenerative braking	0 (D frame and types below)	0	The utilization rate of regenerative braking is fixed at 3%, and parameter 06-06(P.70) is invalid
			1	The usage rate of regenerative braking is the set value of 06-06(P.70)
		2 (D frame and types above)	2	Protection of external brake unit
06-06 P.70	Special regenerative braking rate	0.0%	0~100.0%	---

Setting Regenerative brake

◆ During the period when the output frequency of the inverter changes from high frequency to low frequency, due to load inertia, the rotating speed of the motor is higher than the output frequency of the inverter at an instant, thus forming the generator effect. This will cause the regenerative voltage between the main circuit terminals (+/P)-(-/N), which may result in damage to the inverter. Therefore, a regenerative braking resistor with an appropriate size is installed between the main circuit terminals +/P and PR to absorb the feedback energy.

◆ There is a transistor in the inverter and the proportion of conduction time is called “regenerative braking rate”. The greater the value of the regenerative braking rate, the more energy the regenerative braking resistor consumes and the stronger the braking capability.

Note: 1. If the inverter is used in the case of high-frequency start/stop, a high-power regenerative braking resistor will need to be used.
2. Please refer to section 3.6.3 for the selective purchasing of regenerative braking resistor.

5.7.4 Decrease carrier protection setting

➢ It selects decrease carrier/decrease rated current protection by setting parameters

Parameter	Name	Default	Setting range	Content
06-07 P.263	Decrease carrier protection setting	0	0	Fixed carrier frequency, and limit the load current according to the set carrier.
			1	Fixed rated current, and limit the carrier according to the load current and temperature.

Setting Decrease carrier protection

◆ 06-07(P.263)=0, fixed carrier frequency, but the rated current of the inverter will be reduced according to the set carrier frequency and corresponding curve, so as to avoid overheating of the IGBT module of the inverter:

440V type light-load rating
(ND)

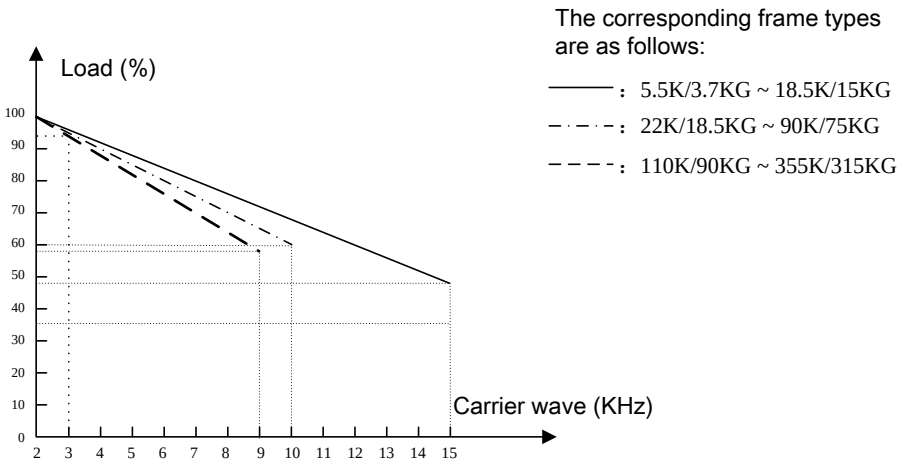

440V type heavy-load rating
(HD)

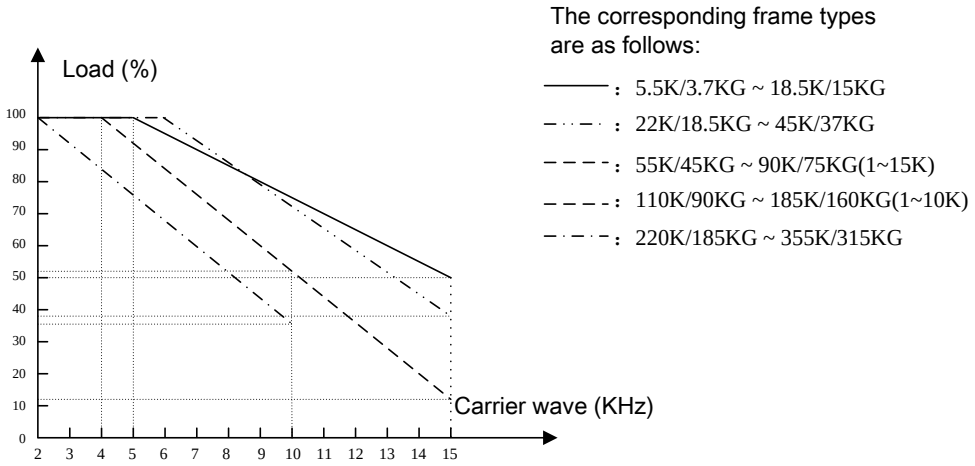

◆ 06-07(P.263)=1, fixed rated current, the inverter will automatically reduce operating carrier frequency according to IGBT module temperature to avoid overheating of IGBT module.

The corresponding rule is as follows:

Type	The temperature rising to (℃)	The temperature dropping to (℃)
043-5.5K/3.7KG~043-18.5K/15KG	105	94
043-22K/18.5KG	92	83
043-30K/22KG	97	88
043-37K/30KG~043-45K/37KG	105	94
043-55K/45KG~043-132K/110KG	79	71
043-160K/132KG~043-185K/160KG	105	94
043-220K/185KG~043-355K/315KG	92	83

5.7.5 Over torque detection

➢ The output current detection function can be used for over torque detection.

Parameter	Name	Default	Setting range	Content
06-08 P.155	Over torque detection level	0.0%	0	No over torque detection
			0.1~200%	Over torque detection
06-09 P.156	Over torque detection time	1.0s	0.1~60.0s	---
06-10 P.260	Action selection of over torque detection	1	0	OL2 alarm will not be reported after over torque detection, and operation will continue
			1	OL2 alarm will be reported after over torque detection, and operation will stop

Setting Over torque detection

◆ If the setting value of 06-08 is not zero, select the over-torque detection function.

◆ If the output current exceeds the over-torque detection level (06-08) and the over-torque detection time (06-09), the inverter will report OL2 alarm and stop operation. If the multi-function digital output terminals SO1-SE (03-10(P.40)), SO2-SE (03-12(P.129)), and multi-function relays A1-B1-C1 (03-11(P.85)), A2-B2-C2 (03-13(P.130)) are set to over-torque alarm (set value is 19), the inverter will output a signal. If the multi-function digital output terminals SO1-SE (03-10(P.40)), SO2-SE(03-12(P.129)), and multi-function relays A1-B1-C1 (03-11(P85)), A2-B2-C2 (03-13(P.130)) are set to over-load alarm (set value is 3), and 06-10 (P.260)=1, the inverter will output a signal. Please refer to 03-10(P.40)~03-13(P.130) in chapter 5 for details.

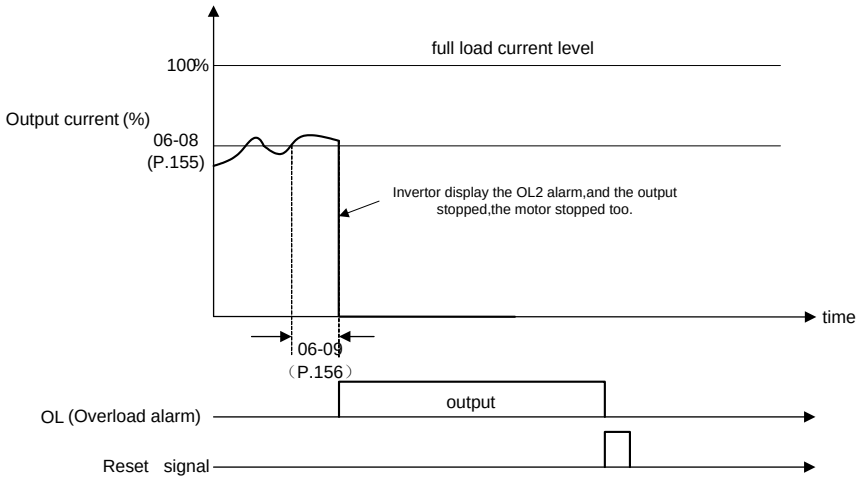

5.7.6 Stall level when restart

➢ It can set the stall prevention level when restart through 06-11

Parameter	Name	Default	Setting range	Content
06-11 P.160	Stall level when restart	100.0%	0~150.0%	When restarting, stall prevention operation level

Settin Stall level when restart

◆ In the restart process, if the output current of the inverter is higher than the set value of 06-11 (P.160), the inverter will be in a current stall state.

5.7.7 Cooling fan operation mode

➢ Control the start/stop condition and alarm report mode of the cooling fan through parameter setting.

Parameter	Name	Default	Setting range	Content
06-12 P.245	Cooling fan operation mode	0	0	When running, the fan is ON, and after stopping for 30S, the fan is OFF
			1	When power-on, the fan is always ON, and when power-off, the fan is OFF
			2	During operation, if the heat sink temperature is greater than 60℃, the fan is ON; If less than 40℃, the fan is OFF; When stopped, the fan is OFF
			3	If the temperature value of the heat sink is greater than 60℃, the fan is ON; If it is less than 40℃, the fan is OFF.

Setting Cooling fan operation mode

◆ Each bit of 06-12(P.245) is used to specify the start/stop condition.
For example, in order to realize “the fan is always ON after the inverter is powered on and OFF after the power is off”, 06-12(P.245)=1 should be set.

Note: According to the installation environment conditions of the inverter, if the fan can be operated for as little time as possible through reasonable setting, the service life of the fan can be prolonged.

5.7.8 Input phase failure protection

➢ Set the input phase failure protection valid/invalid

Parameter	Name	Default	Setting range	Content
06-13 P.281	Input phase failure protection	0	0	No input phase failure protection function
			1	If the input phase fails, the keypad displays “IPF” alarm, and the inverter stops outputting

Setting Input phase failure protection

◆ 06-13(P.281)=1 sets the input phase failure protection to be valid, and report “IPF” alarm at the input phase failure or three-phase imbalance.

5.7.9 Output short circuit protection selection

➢ Set the output short circuit protection valid/invalid.

Parameter	Name	Default	Setting range	Content
06-14 P.287	Output short circuit protection selection	1	0	No output side short-circuit protection function
			1	If the output side is short-circuited, the keypad displays “SCP” alarm, and the inverter stops outputting

Setting Output short circuit protection selection

◆ If 06-14(P.287) is set to 0, the output side short circuit protection function will be cancelled.

◆ If 06-14(P.287)=1, the output short circuit protection is set to be valid, and when a short circuit on the output side is detected, the “SCP” alarm will be reported.

5.7.10 PTC protection selection

➢ After PTC action, the driver is in operation mode.

Parameter	Name	Default	Setting range	Content
06-15 P.533	PTC protection mode	0	0	Warning and continue operation
			1	Give abnormal warning and slow down to stop
			2	Give alarm and stop freely
			3	No warning
06-16 P.534	PTC level percentage	0.0%	0	No PTC alarm
			0.1%~100.0%	The action level of PTC function is 100% corresponding to the maximum analog input value

Setting PTC level

◆ 2-5/4-5/3-5 needs to be selected, and the analog input functions 02-00(P.500)~02-02(P.504) is 11 (positive temperature coefficient thermistor (PTC) input value). This parameter is defined as the action level of PTC function, and 100% corresponds to the maximum analog input value.

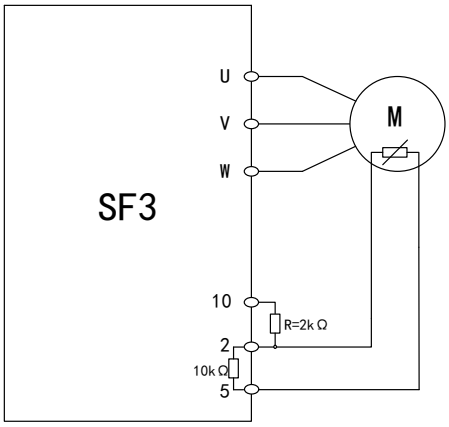

PTC resistor input wiring diagram

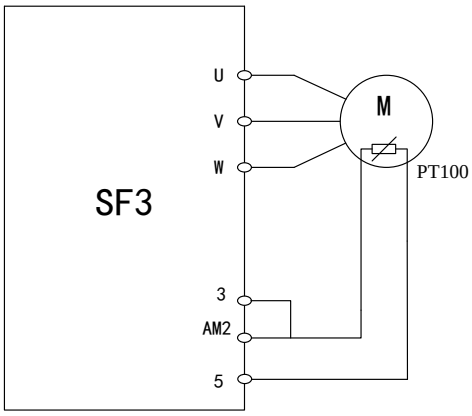

PT100 resistor input wiring diagram

5.7.11 Maintenance alarm function

➢ After the cumulative operation time of the inverter reaches the set time of the parameters, the maintenance alarm signal will be output.

Parameter	Name	Default	Setting range	Content
06-17 P.261	Maintenance alarm function	0	0	No maintenance alarm function
			1~9998day	Used to set the time for maintenance alarm output signal

Setting Maintenance alarm function

◆ If the function selection (03-10(P.40),03-11(P.85),03-12(P.129),03-13(P.130)) of the multi-function digital output terminal is equal to 18, it is the maintenance alarm function detection. If the operating days of the inverter reach the set value of the maintenance alarm time parameter 06-17(P.261), the multi-function digital output terminal of inverter will output signal.

5.7.12 Leakage current to ground protection

➢ Control whether to start the Leakage current to ground detection through parameters and set the detection level.

Parameter	Name	Default	Setting range	Content
06-19 P.282	Leakage current to ground detection level during operation	50.0%	0~100.0%	315K/280KG and types below
		70.0%		355K/315KG type

Setting Leakage current to ground protection

◆ The Leakage current to ground detection after power-on is set by 06-19(P.282).

◆ If the output short-circuited current exceeding 50% of the rated current is detected after power-on, the inverter will stop outputting and report GF alarm.

5.7.13 Output phase failure protection

➢ Control whether to start the output phase failure protection through parameter.

Parameter	Name	Default	Setting range	Content
06-20 P.262	Output phase failure protection	0	0	No output phase failure protection
			1	If the input phase fails, the keypad displays “LF” alarm, and the inverter stops outputting

Setting Output phase failure protection

◆ The inverter will output the phase failure protection function. When 06-20(P.262)=1, the inverter will report “LF” alarm at output phase failure; When 06-20(P.262)=0, the function will be cancelled.

5.7.14 Low voltage protection

➢ Control the low voltage protection level through parameter.

Parameter	Name	Default	Setting range	Content
06-21 P.705	Low voltage protection level	310V	310~440V	440V type

Setting Low voltage protection level

◆ If the input voltage of the inverter is too low, causing its DC bus voltage to be lower than the setting of 06-21(P.705), the inverter will enter the under-voltage protection state, cease output and stop freely.

5.7.15 Regenerative brake operation level

➢ Set the regenerative brake (brake resistance) operation level through parameter

Parameter	Name	Default	Setting range	Content
06-22 P.706	Regenerative brake operation level	720V	410~800V	440V type

Setting Regenerative brake operation level

◆ 06-22(P.706) is the regenerative brake (brake resistance) operation level. When the DC (PN) bus voltage is higher than the set value of 06-22(P.706), the regenerative brake (brake resistance) starts to work.

5.7.16 Voltage stall operation level

➢ This parameter is used to set the voltage stall operation identification level

Parameter	Name	Default	Setting range	Content
06-23 P.707	Voltage stall operation level	760V	410~800V	440V type

Setting Voltage stall operation level

◆ If the output voltage of the inverter is higher than the setting of 06-23 (P.707), the inverter is in a voltage stall state.

5.7.17 Electrolytic capacitor lifetime detection

➢ The electrolytic capacitor of the main circuit may be aged during use and its capacity may be reduced. This function is to detect the service life of the electrolytic capacitor in the current main circuit and serve as a replacement standard.

Parameter	Name	Default	Setting range	Content
06-24 P.708	Electrolytic capacitor lifetime detection	0	0~1	0: No capacitor lifetime detection function After setting “1” and turning OFF the power supply, began to measure the lifetime of the electrolytic capacitor in the main circuit. When the set value is changed to “3” after power is applied again, the measurement process is completed
06-25 P.709	Electrolytic capacitor lifetime detection level	100.0%	0~100.0%	Detect the percentage of capacitance value to factory detection value
06-26 P.710	Electrolytic capacitor lifetime detection result	Read only	0	No abnormal
			1	Abnormal electrolytic capacitance (the capacitance value is less than 85% of the factory default value)

Setting Electrolytic capacitor lifetime detection

◆ Detect the aging degree of the capacitance of the main circuit through the monitor.

06-24(P.708)	Content	Remark
0	No capacitor lifetime detection function	Initial value
1	Start measurement	After the power supply is set to OFF, start measuring the service life of the electrolytic capacitor of the main circuit.
3	Capacitor lifetime detection completed	It can only be displayed and cannot be set
7	The control mode is incorrect and the detection cannot be performed (not in V/F mode)	
8	The detection process is forced to end	
9	An error occurs during the detection process	

The detection percentage of capacitance life 06-25(P.709) is the result of theoretical calculation. The detection result can only be used as a reference.

The factory default detection capacitance value is 100.0%, if the detection result 06-25(P.709) is less than 80%, then 06-26(P.710)=”1”. The abnormal signal of capacitance life can be output through digital input terminals (set 03-10(P.40), 03-11(P.85), 03-12(P.129), 03-13(P.130) as 20).

◆ The detection steps are as follows:

1. Connect the motor
2. Set 06-24(P.708)=”1” in the non-operating state and disconnect the power supply
3. When the power supply is turned off, the inverter is used to apply DC voltage to the motor, calculating the capacitance capacity.
4. After the Power indicator light goes out, reconnect the power supply
5. If 06-24(P.708)=”3” is confirmed, read out 06-25(P.709) to confirm the aging degree of the capacitance of the main circuit

◆ Capacitance lifetime cannot be normally detected under the following conditions:

1. The P/N terminal is connected to DC power supply
2. In the process of detection, the inverter power supply is set to ON
3. The motor is not connected to the inverter
4. The motor is rotating (free operation state)
5. Alarm occurs during capacitance detection process
6. Through MRS signal, the inverter shut off the output
7. The capacity of the motor is less than that of the inverter by more than two grades
8. Run command appears in the detection process

Note: 1. Due to the influence of capacitance temperature on capacitance capacity, please start the detection process three hours after the inverter is disconnected from the power supply
2. The detection process of electrolytic capacitor lifetime can only be carried out in V/F mode.

5.7.18 Time record function

➢ It is used to record the cumulative operation time of the inverter.

Parameter	Name	Default	Setting range	Content
06-27 P.292	Total inverter operation time (minutes)	0 min	0~1439min	---
06-28 P.293	Total inverter operation time (days)	0 day	0~9999day	---
06-29 P.296	Total inverter power on time (minutes)	0 min	0~1439min	---
06-30 P.297	Total inverter power on time (days)	0 day	0~9999day	---

Settin Time record function

- 06-27(P.292) is the cumulative operation minutes of the inverter. The updated value cannot be changed when 00-02=3(P.998=1) is executed or power is cut off, while the cumulative time can be cleared when 06-27(P.292)=0.
- 06-27(P.292) is the cumulative operation days of the inverter. The updated value cannot be changed when 00-02=3(P.998=1) is executed or power is cut off, while the cumulative days can be cleared when 06-28(P.293)=0.

5.7.19 Output power calculation

Parameter	Name	Default	Setting range	Content
06-31 P.298	Output power (lower 16 bits)	Read only	Read only	There are two decimals, read only and can be written to 0
06-32 P.299	Output power (higher 16 bits)	Read only	Read only	Read only and can be written to 0

Output power value=06-32(P.299)*2^{16}+06-31(P.298), and the increment is KWH.

5.7.20 Alarm query function

➢ The user can obtain the details of the latest 12 alarms through this parameter group.

Parameter	Name	Default	Setting range	Content	
06-40 P.288	Alarm code query	1	0~12	The value 1~12 of 06-40 (P.288) correspond to the abnormal codes of 06-41 (P.289) showing alarm E1~E12.	
06-41 P.289	Alarm code display	Read only	Read only		
06-42 P.290	Alarm message query	0	0~10	Alarm information of 06-40 (P.288) alarm	When 06-42 (P.290) =1, 06-43 (P.291) displays the frequency of occurrence of the 06-40 (P.288) alarm. When 06-42 (P.290) =2, 06-43 (P.291) displays the current of occurrence of the 06-40 (P.288) alarm. When 06-42 (P.290) =3, 06-43 (P.291) displays the output voltage of occurrence of the 06-40 (P.288) alarm. When 06-42 (P.290) =4, 06-43 (P.291) displays the temperature rising accumulation rate of occurrence of the 06-40 (P.288) alarm. When 06-42 (P.290) =5, 06-43 (P.291) displays the (+/P) - (-/N) voltage of occurrence of the 06-40 (P.288) alarm. When 06-42 (P.290) =6, 06-43 (P.291) displays the total inverter operation time of occurrence of the 06-40 (P.288) alarm.
06-43 P.291	Alarm message display	Read only	Read only		
06-43 P.291	Alarm message display	Read only	Read only	Alarm information of 06-40 (P.288) alarm	When 06-42 (P.290) =7, 06-43 (P.291) displays the inverter operation status code of occurrence of the 06-40 (P.288) alarm. When 06-42 (P.290) =8, 06-43 (P.291) displays the dates (years and months) of occurrence of the 06-40 (P.288) alarm. When 06-42 (P.290) =9, 06-43 (P.291) displays the dates (days and hours) of occurrence of the 06-40 (P.288) alarm. When 06-42 (P.290) =10, 06-43 (P.291) displays the dates (minutes and seconds) of occurrence of the 06-40 (P.288) alarm.

Setting Alarm query function

◆ The user can read this parameter to know the previous 12 alarms and their corresponding information such as frequency, current and voltage. The abnormal code recorded by this parameter and the status information when the alarm occurs will be cleared If performing the 00-02=1(P.996) operation.

◆ If parameters 06-40(P.288) and 06-42(P.290) are both 0, 06-41(P.289) and 06-43(P.291) will also display 0.

◆ 06-41 (P.290) and 06-43 (P.291) will only work if 06-40 (P.288) has been set. For example, if 06-40 (P.288) =3, 06-41(P.290) =2 is set, then 06-42 (P.289) displays the abnormal code of the alarm E3 and 06-43 (P.291) displays the current value of the alarm E3.

Abnormal codes corresponding to alarm contents are shown in the following table:

Abnormal code	Alarm content	Abnormal code	Alarm content	Abnormal code	Alarm content	Abnormal code	Alarm content	Abnormal code	Alarm content
00	No abnormal	32	OV1	49	THN	82	IPF	144	OHT
16	OC1	33	OV2	50	NTC	97	OLS	160	OPT
17	OC2	34	OV3	64	EEP	98	OL2	179	SCP
18	OC3	35	OV0	161	PUE	112	BE	192	CPU
19	OC0	48	THT	66	PID	129	AErr	193	CPR
212	bEb	213	PTC	51	NTC2	52	NTC3	53	NTC4

54	NTC5	55	NTC6	84	LF	85	HDC	86	ADE
128	GF	162	CbE	195	EbE1	212	bEb	213	PTC
113	rAE	65	FAN						

Note: Set 06-42(P.290)=8,9,10. Select 06-43 (P.291) to display the years/months, days/hours, minutes/seconds when the alarm occurs. These selections are only valid when PU301C is selected and used in case of alarm. If PU301 is selected and used, these three selections will be invalid.

5.7.21 Alarm code query

➢ It is used to monitor the last 12 alarms

Parameter	Name	Default	Setting range	Content
06-44 P.740	The first (latest) alarm record E1	Read only	Read only	---
06-45 P.741	The second alarm record E2	Read only	Read only	---
06-46 P.742	The third alarm record E3	Read only	Read only	---
06-47 P.743	The fourth alarm record E4	Read only	Read only	---
06-48 P.744	The fifth alarm record E5	Read only	Read only	---
06-49 P.745	The sixth alarm record E6	Read only	Read only	---
06-50 P.746	The seventh alarm record E7	Read only	Read only	---
06-51 P.747	The eighth alarm record E8	Read only	Read only	---
06-52 P.748	The ninth alarm record E9	Read only	Read only	---
06-53 P.749	The tenth alarm record E10	Read only	Read only	---
06-54 P.750	The eleventh alarm record E11	Read only	Read only	---
06-55 P.751	The twelfth alarm record E12	Read only	Read only	---

Setting Alarm code

◆ Please refer to 5.7.19 for alarm codes corresponding to alarm contents.

5.7.22 The latest alarm message (E1)

- It can record the details of the latest failure and analyze whether there is any abnormal condition in the inverter.

Parameter	Name	Default	Setting range	Content
06-56 P.752	Output frequency during E1 alarm	Read only	Read only	---
06-57 P.753	Output current during E1 alarm	Read only	Read only	---
06-58 P.754	Output voltage during E1 alarm	Read only	Read only	---
06-59 P.755	Temperature rising accumulation rate during E1 alarm	Read only	Read only	---
06-60 P.756	PN voltage during E1 alarm	Read only	Read only	---
06-61 P.757	Total inverter operation time during E1 alarm	Read only	Read only	---
06-62 P.758	Inverter operation status code during E1 alarm	Read only	Read only	---
06-63 P.759	E1 alarm date (years/months)	Read only	Read only	---
06-64 P.760	E1 alarm date (days/hours)	Read only	Read only	---
06-65 P.761	E1 alarm date (minutes/seconds)	Read only	Read only	---

Note: Set 06-63(P.759) ~06-65(P.761) to display the years/months, days/hours, minutes/seconds when the alarm occurs. These selections are only valid when PU301C is selected and used in case of alarm. If PU301 is selected and used, these three selections will be invalid.

5.7.23 The second alarm message (E2)

- It can record the details of the second failure and analyze whether there is any abnormal condition in the inverter.

Parameter	Name	Default	Setting range	Content
06-70 P.766	Output frequency during E2 alarm	Read only	Read only	---
06-71 P.767	Output current during E2 alarm	Read only	Read only	---
06-72 P.768	Output voltage during E2 alarm	Read only	Read only	---
06-73 P.769	Temperature rising accumulation rate during E2 alarm	Read only	Read only	---
06-74 P.770	PN voltage during E2 alarm	Read only	Read only	---
06-75 P.771	Total inverter operation time during E2 alarm	Read only	Read only	---
06-76 P.772	Inverter operation status code during E2 alarm	Read only	Read only	---
06-77 P.773	E2 alarm date (years/months)	Read only	Read only	---
06-78 P.774	E2 alarm date (days/hours)	Read only	Read only	---
06-79 P.775	E2 alarm date (minutes/seconds)	Read only	Read only	---

Note: Set 06-77(P.773) ~06-79(P.775) to display the years/months, days/hours, minutes/seconds when the alarm occurs. These selections are only valid when PU301C is selected and used in case of alarm. If PU301 is selected and used, these three selections will be invalid.

5.7.24 Fire mode

Parameter	Name	Default	Setting range	Content
06-84 P.1040	Fire mode	0	XXX0	Off (fire mode off (normal mode)
			XXX1	Forward operation (inverter runs forward in fire mode)
			XXX2	Reverse operation (inverter runs reverse in fire mode)
			XX0X	Bypass off (close bypass function)
			XX1X	Bypass on (enable bypass function)
			X0XX	Open loop control (inverter will speed up to fire mode frequency 06-85 (P.1041))
			X1XX	Closed loop control (run in PID, PID target set in 06-87 (P.1043))
			0XXX	Manual exit fire mode (after the fire mode terminal function is off, manually reset inverter to go to normal mode)
			1XXX	Auto exit fire mode (after the fire mode terminal function is off, inverter automatically return to normal mode)
06-85 P.1041	Fire mode frequency	60.00Hz	0~650.00Hz	Open loop control target frequency
06-86 P.1042	Fire mode delay bypass	0.0s	0.0~6000.0s	Fire mode delay bypass on
06-87 P.1043	Fire mode PID target	0.0	0~08-43(P.251)	Fire mode closed-loop PID target.
06-88 P.1044	Fire mode cumulate times	0	Read only	Times inverter triggers fire mode

Setting Fire mode

◆ **Wiring diagram**

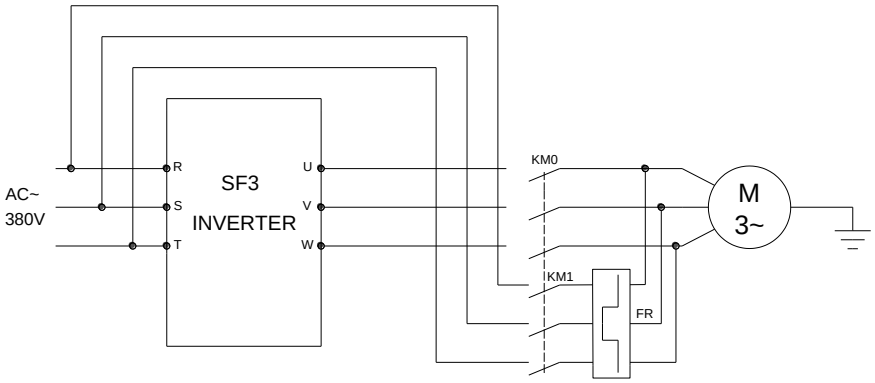

Wiring diagram

Fire mode with bypass indication function, when the bypass terminal connect ON, the moter driven by main power supply.

◆ **Fire mode on**

Parameter 06-84(P.1040)= X0XX :06-84(P.1040) =XXX1 or XXX2 and multi-function input terminal 92 is ON, inverter will be in fire mode. Inverter will accelerate to set frequency 06-85(P.1041), and screen show fire alarm. Inverter operation mode will show fire mode, the fire mode cumulate times would be added in 06-88(P.1044). If multi-function output terminal is 42 ,inverter output fire mode operation signal. If paremeter 06-84(P.1040) =XX1X, bypass function is enabled and multi-function output terminal=43, fire mode bypass indication will trigger and will switch the power to main power supply.

Parameter 06-84(P.1040) =X1XX, analog input terminal=4: 06-84(P.1040)=XXX1 or XXX2 and multi-function input terminal 92 is ON inverter will be in fire mode. Inverter will use 06-87(P.1043) as target for PID control, and screen show fire alarm. Inverter operation mode will show fire mode, the fire mode cumulate times would be added in 06-88(P.1044). If multi-function output terminal is 42 , inverter output fire mode operation signal. If paremeter 06-84(P.1040) =XX1X, bypass function is enabled and multi-function output terminal=43, fire mode bypass indication will trigger and will switch the power to main power supply.

When PID feedback signal is abnormal, the inverter will switch to open-loop control and run at 06-85(P.1041) frequency.

◆ **Bypass function**

Bypass trigger condition：(06-84(P.1040)=XX1X)

(1) If the alarm reset function is not turned on in fire mode, 10-13(P.67) =0, and the alarm time over set value 06-86(P.1042), then bypass function triggered. Multi-function output terminal =43, fire mode bypass indication “ON”。

(2) Under fire mode, if alarm retry function 10-13(P.67) is not 0 , After an alarm occurs and the alarm reset is successful before the bypass function is activated, the bypass delay time counter will automatically reset to zero and wait for the next trigger.

(No needs to set alarm retry function 10-12(P.65) under fire mode).

Table for Alarm detection and bypass startup

Alarm code	Name	Normal	Fire mode	Bypass function
0x13	Over current when stop (OC0)	Will detect	Will detect	Usable
0x10	Over current during acceleration (OC1)	Will detect	Will detect	Usable
0x11	Over current at constant speed (OC2)	Will detect	Will detect	Usable
0x12	Over current during deceleration (OC3)	Will detect	Will detect	Usable
0x23	Over-voltage when stop (OV0)	Will detect	Will detect	Usable
0x20	Over-voltage during acceleration (OV1)	Will detect	Will detect	Usable
0x21	Over-voltage at constant speed (OV2)	Will detect	Will detect	Usable
0x22	Over-voltage during deceleration (OV3)	Will detect	Will detect	Usable

0x30	IGBT module Overheat (THT)	Will detect	Will detect	Usable
0x31	Motor Overheat (THN)	Will detect	Will not detect	Unusable
0x32	Module Overheat (NTC)	Will detect	Will detect	Usable
0x33	Module 2 Overheat (NTC2)	Will detect	Will detect	Usable
0x34	Module 3 Overheat (NTC3)	Will detect	Will detect	Usable
0x35	Module 4 Overheat (NTC4)	Will detect	Will detect	Usable
0x36	Module 5 Overheat (NTC5)	Will detect	Will detect	Usable
0x37	Module 6 Overheat (NTC6)	Will detect	Will detect	Usable
0x40	Memory error(EEP)	Will detect	Will not detect	Unusable
0x41	Cooling fan abnormal (FAN)	Will detect	Will not detect	Unusable
0x42	PID error (PID)	Will detect	Will not detect	Unusable
0x52	Input power error (IPF)	Will detect	Will detect	Usable
0x54	Output phase loss (LF)	Will detect	Will detect	Usable
0x55	Hardware self-detect circuit error (HDC)	Will detect	Will detect	Unusable
0x56	Three-phase circuit sampling circuit error (ADE)	Will detect	Will not detect	Unusable
0x57	Main circuit drive power error (DPF)	Will detect	Will detect	Unusable
0x61	Stall prevention and protection (OLS)	Will detect	Will not detect	Unusable
0x62	Torque overload (OL2)	Will detect	Will not detect	Unusable
0x70	Brake transistor (BE)	Will detect	Will not detect	Unusable
0x71	Relay abnormal operation (rAE)	Will detect	Will detect	Usable
0x80	Output short-circuit to ground (GF)	Will detect	Will detect	Usable
0x81	Terminal 4-5/3-5 error (AEr)	Will detect	Will not detect	Unusable
0x90	External overheat (OHT)	Will detect	Will detect	Usable
0xA0	RS-485 connecter error (OPT)	Will detect	Will not detect	Unusable
0xA1	PU connecter error (PUE)	Will detect	Will not detect	Unusable
0xA2	Expansion connecter error (CbE)	Will detect	Will not detect	Unusable
0xB3	Short circuit over-current (SCP)	Will detect	Will detect	Usable
0xC0	CPU error (CPU)	Will detect	Will detect	Unusable
0xC1	CPU error(CPr)	Will detect	Will detect	Unusable
0xC3	Expansion card SLOT1 error (EbE1)	Will detect	Will not detect	Unusable
0xD5	Motor overheat (PTC)	Will detect	Will detect	Usable

◆ **Fire mode off**

When input terminal =92/93, terminal status ON and then OFF,

1.06-84(P.1040) =0XXX, manual turn off the fire mode. Power off inverter to switch off bypass; then power on fire mode turn off.

2.06-84(P.1040) =1XXX, auto turn off the fire mode. Inverter will auto close the bypass mode and back to normal mode.

Note：

1.Inverter operation direction under fire mode can refer to 06-84(P.1040)=XXX1(Forward) or XXX2(Reverse)。Other operation directions are invalid. Parameter 00-15(P.78) both forward and reverse direction are invalid。

2. All commands from keypad are ingored under fire mode. (Operation command, stop command, and JOG command are includeded)

3. Ignored all RS485 communication command under fire mode. (Operation command, stop command, and JOG command are includeded)

4. JOG command is invalid under fire mode. (JOG command source：Keypad, external terminal, communication)，JOG command fail during operation.

5. Acceleration and deceleration function fail under fire mode, and acceleration and deceleration under operation would cancel automationcally.

6. Open-loop control does not execute PID function under fire mode, and PID function is automatically cancel during operation.

7. Do not execute sleep function under fire mode.

8. Under fire mode, inverter will not execute DC brake before inverter start, and current execution would cancel automatically.

9. The current stall prevention function will not execute under fire mode, and the executing current stall prevention function would invalid automatically.

10. The over torque function detection is invalid under fire mode.

11. Communication error detection is invalid under fire mode.

12. Low voltage detection will not action under fire mode, inverter would continue running until out of power.

13. Only when the power off then on or fire mode off, the fire bypass terminal output can be closed.

14. Under fire mode, Digital input terminal function that stops inverter (MRS, P_MRS, External force stop) will not work.

15. Multi-pump water supply will stop automatically under fire mode.

16. Parameter 06-85(P.1041) set value can not exceed parameter 01-00(P.1) under fire mode. If exceeds 01-00 (P.1), the output frequency will be limit to 01-00(P.1) automatically.

5.8 Communication parameter group 07

Parameter	Parameter number	Parameter name	Setting range	Default	Reference page
07-00	P.33	COM1 communication protocol selection	0: Modbus protocol 1: Shihlin protocol 2: PLC protocol (Effective when using Shihlin built-in PLC -)	1	190
07-01	P.36	COM1 inverter communication station number	0~254	0	190
07-02	P.32	COM1 serial communication baud rate	0: baud rate is 4800bps 1: baud rate is 9600bps 2: baud rate is 19200bps 3: baud rate is 38400bps 4: baud rate is 57600bps 5: baud rate is 115200bps	1	190
07-03	P.48	COM1 data length	0: 8bit 1: 7bit	0	190
07-04	P.49	COM1 stop bit length	0: 1bit 1: 2bit	0	190
07-05	P.50	COM1 parity check selection	0: No parity check 1: Odd check 2: Even check	0	190
07-06	P.51	COM1 CR/LF selection	1: CR only 2: Both CR and LF are available	1	190
07-07	P.154	COM1 Modbus communication format	0: 1,7,N,2 (Modbus, ASCII) 1: 1,7,E,1 (Modbus, ASCII) 2: 1,7,O,1 (Modbus, ASCII) 3: 1,8,N,2 (Modbus, RTU) 4: 1,8,E,1 (Modbus, RTU) 5: 1,8,O,1 (Modbus, RTU)	4	190
07-08	P.52	COM1 communication abnormal allowable times	0~10	1	190
07-09	P.53	COM1 communication interval allowed time	0~999.8s: Checking communication timeout with the set value 99999: No timeout check	99999	190
07-10	P.153	COM1 communication error handling	0: Alarm and idling and stopping 1: No alarm and continuing to operation	1	190`
07-11	P.34	Communication EEPROM write-in selection	0: When writing parameters in communication mode, write in RAM and EEPROM 1: When writing parameters through communication, only write into RAM	0	205
07-15	P.800	CANopen slave address	0~127	0	205
07-16	P.801	CANopen rate	0: 1Mbps 1: 500Kbps 2: 250K/280KFbps 3: 125Kbps 4: 100Kbps 5: 50 Kbps	0	205
07-17	P.802	CANopen communication status	0: Node retry status 1: Communication retry status 2: Retry completion status 3: Pre-operation status 4: Operating status 5: Stop status	0	205

Parameter	Parameter number	Parameter name	Setting range	Default	Reference page
07-18	P.803	CANopen control status	0: Boot not completed status 1: Forbidden operation state 2: Pre-excitation status 3: Excitation state 4: Allowed operating status 7: Quick action stop status 13: Trigger error action status 14: Error status	0	205
07-25	P.810	PU communication protocol selection	0: Modbus protocol 1: Shihlin protocol 2: PLC protocol (Effective when using Shihlin built-in PLC)	1	190
07-26	P.811	PU inverter communication station number	0~254	0	190
07-27	P.812	PU serial communication baud rate	0: baud rate is 4800bps 1: baud rate is 9600bps 2: baud rate is 19200bps 3: baud rate is 38400bps 4: baud rate is 57600bps 5: baud rate is 115200bps	1	190
07-28	P.813	PU data length	0: 8bit 1: 7bit	0	190
07-29	P.814	PU stop bit length	0: 1bit 1: 2bit	0	190
07-30	P.815	PU parity check selection	0: No parity check 1: Odd check 2: Even check	0	191
07-31	P.816	PU CR/LF selection	1: CR only 2: Both CR and LF are available	1	191
07-32	P.817	PU Modbus communication format	0: 1,7,N,2 (Modbus, ASCII) 1: 1,7,E,1 (Modbus, ASCII) 2: 1,7,O,1 (Modbus, ASCII) 3: 1,8,N,2 (Modbus, RTU) 4: 1,8,E,1 (Modbus, RTU) 5: 1,8,O,1 (Modbus, RTU)	4	191
07-33	P.818	PU communication abnormal allowable times	0~10	1	191
07-34	P.819	PU communication interval allowed time	0~999.8s: Checking communication timeout with the set value 99999: No timeout check	99999	191
07-35	P.820	PU communication error handling	0: Alarm and idling and stopping 1: No alarm and continuing to operation	1	191
07-41	P.826	Communication abnormal allowable times of communication card (optional)	0~10	1	191
07-42	P.827	Communication error handling of communication card (optional)	0: Alarm and idling and stopping 1: No alarm and continuing to operation	1	191
07-43	P.828	Communication interval allowed time of communication card (optional)	0~999.8s: Checking communication timeout with the set value 99999: No timeout check	99999	191
07-44	P.829	Version of EP301 communication card (optional)	Read only	Read only	206
07-45	P.830	IP configuration	0: Static IP 1: Dynamic IP	0	206
07-46	P.831	IP address 1	0~255	192	206
07-47	P.832	IP address 2	0~255	168	206
07-48	P.833	IP address 3	0~255	2	206
07-49	P.834	IP address 4	0~255	102	206
07-50	P.835	Subnet mask 1	0~255	255	206
07-51	P.836	Subnet mask 2	0~255	255	206
07-52	P.837	Subnet mask 3	0~255	255	206
07-53	P.838	Subnet mask 4	0~255	0	206
07-54	P.839	Default gateway 1	0~255	192	206
07-55	P.840	Default gateway 2	0~255	168	206
07-56	P.841	Default gateway 3	0~255	2	206
07-57	P.842	Default gateway 4	0~255	100	206

5.8.1 Shihlin protocol and Modbus protocol

- These protocols can link and communicate with the master computer through the RS-485 communication port of the inverter for parameter setting, monitoring, etc.

Parameter	Name	Default	Setting range	Content
07-00 P.33	COM1 communication protocol selection	1	0	Modbus protocol
			1	Shihlin protocol
			2	PLC protocol (Effective when using Shihlin built-in PLC)
07-01 P.36	COM1 inverter communication station number	0	0~254	The number actually realized is determined by the wiring method and impedance matching. Please set its value to a non-zero value when using Modbus protocol.
07-02 P.32	COM1 serial communication baud rate	1	0	baud rate is 4800bps
			1	baud rate is 9600bps
			2	baud rate is 19200bps
			3	baud rate is 38400bps
			4	baud rate is 57600bps
			5	baud rate is 115200bps
07-03 P.48	COM1 data length	0	0	8bit
			1	7bit
07-04 P.49	COM1 stop bit length	0	0	1bit
			1	2bit
07-05 P.50	COM1 parity check selection	0	0	No parity check
			1	Odd check
			2	Even check
07-06 P.51	COM1 CR/LF selection	1	1	CR only
			2	Both CR and LF are available
07-07 P.154	COM1 Modbus communication format	4	0	1,7,N,2 (Modbus, ASCII)
			1	1,7,E,1 (Modbus, ASCII)
			2	1,7,O,1 (Modbus, ASCII)
			3	1,8,N,2 (Modbus, RTU)
			4	1,8,E,1 (Modbus, RTU)
			5	1,8,O,1 (Modbus, RTU)
07-08 P.52	COM1 communication abnormal allowable times	1	0~10	If the communication error times exceed the set value of 07-08 (P.52) and 07-10 (P.153) is set to 0, the alarm OPT will be reported.
07-09 P.53	COM1 communication interval allowed time	99999	0~999.8s	Checking communication timeout with the set value
			99999	No timeout check
07-10 P.153	COM1 communication error handling	1	0	Alarm and idling and stopping
			1	No alarm and continuing to operation
07-25 P.810	PU communication protocol selection	1	0	Modbus protocol
			1	Shihlin protocol
			2	PLC protocol (Effective when using Shihlin built-in PLC)
07-26 P.811	PU inverter communication station number	0	0~254	The number actually realized is determined by the wiring method and impedance matching. Please set its value to a non-zero value when using Modbus protocol.
07-27 P.812	PU serial communication baud rate	1	0	baud rate is 4800bps
			1	baud rate is 9600bps
			2	baud rate is 19200bps
			3	baud rate is 38400bps
			4	baud rate is 57600bps
			5	baud rate is 115200bps
07-28 P.813	PU data length	0	0	8bit
			1	7bit
07-29 P.814	PU stop bit length	0	0	1bit
			1	2bit

Parameter	Name	Default	Setting range	Content
07-30 P.815	PU parity check selection	0	0	No parity check
			1	Odd check
			2	Even check
07-31 P.816	PU CR/LF selection	1	1	CR only
			2	Both CR and LF are available
07-32 P.817	PU Modbus communication format	4	0	1,7,N,2 (Modbus, ASCII)
			1	1,7,E,1 (Modbus, ASCII)
			2	1,7,O,1 (Modbus, ASCII)
			3	1,8,N,2 (Modbus, RTU)
			4	1,8,E,1 (Modbus, RTU)
			5	1,8,O,1 (Modbus, RTU)
07-33 P.818	PU communication abnormal allowable times	1	0~10	If the communication error times exceed the set value of 07-33 (P.818) and 07-35 (P.820) is set to 0, the alarm PUE will be reported.
07-34 P.819	PU communication interval allowed time	99999	0~999.8s	Checking communication timeout with the set value
			99999	No timeout check
07-35 P.820	PU communication error handling	1	0	Alarm and idling and stopping
			1	No alarm and continuing to operation
07-41 P.826	Communication allowable times of communication card (optional)	1	0~10	If the communication error times exceed the set value of 07-41 (P.826) and 07-42 (P.827) is set to 0, the alarm CbE will be reported.
07-42 P.827	Communication error handling of communication card (optional)	1	0	Alarm and idling and stopping
			1	No alarm and continuing to operation
07-43 P.828	Communication interval allowed time of communication card (optional)	99999	0~999.8s	Checking communication timeout with the set value
			99999	No timeout check

Setting Shihlin protocol and Modbus protocol

- If relevant communication parameters are modified, please reset the inverter.
- SF3 series inverters offer two protocols to choose from: Shihlin protocol and Modbus protocol. Parameters 07-02, 07-01(P.36), 07-08(P.52), 07-09(P.53) and 07-10(P.153) are applicable to both protocols. Parameter 07-03(P.48)~07-06(P.51) only applies to Shihlin agreement and parameter 07-07(P.154) applies only to Modbus protocol. Please refer to the communication protocol for details.

Note: 1. The number actually realized is determined by the wiring method and impedance matching. Please set its value to a non-zero value when using Modbus protocol.
2. If the communication error times exceed the set value of 07-08(P.52) and 07-10(P.153) is set to 0, the alarm OPT will be reported.
3. Modbus protocol is expressed according to start bit, data bit, parity check bit and stop bit. In addition, N means no parity check, E means 1-bit even check, and O means 1-bit odd check.

✓ Composition and wiring of SF3 RS-485 communication interface

1. Terminal configuration of SF3 RS-485 communication interface (COM1)

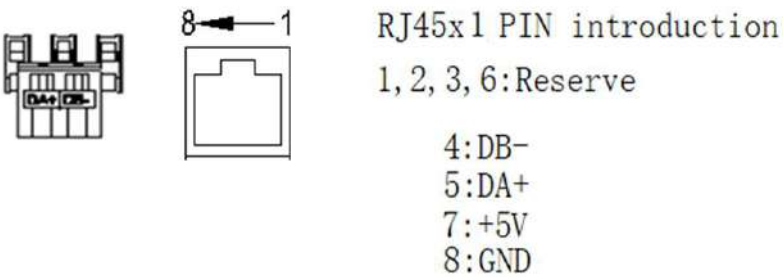

2. Communication between the master computer and a single inverter (take PLC as an example)

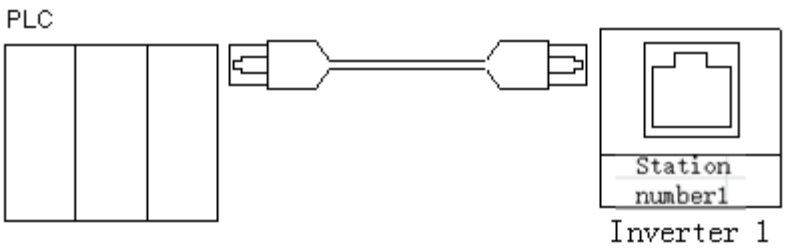

3. Communication between the master computer and multiple inverters (take PLC as an example)

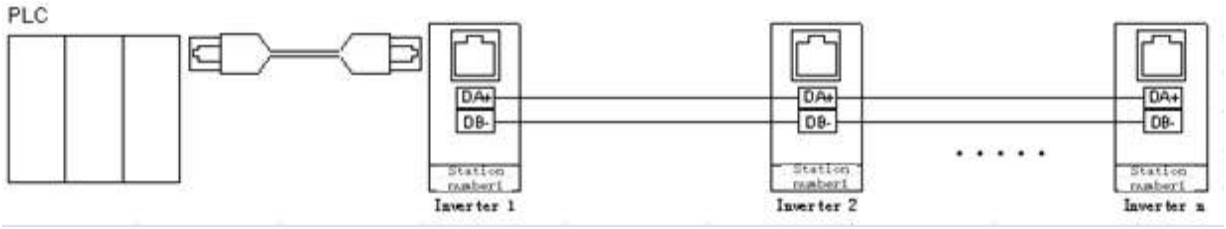

4. SF3 series inverters support Shihlin communication protocol and MODBUS communication protocol.

✓ Shihlin communication protocol

1. The master computer and the inverter are automatically converted into ASCII code (hexadecimal) for communication.
2. Please follow the following steps to perform data communication between the master computer and the inverter.

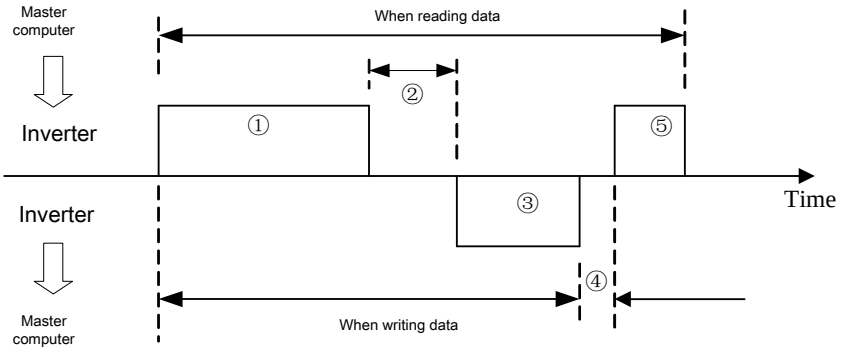

Please refer to the following table for descriptions of communication actions and communication data format type in the above steps:

Mark	Action content		Run command	Frequency write	Parameter write	Inverter reset	Monitoring	Parameter readout
①	The user program of the master computer sends a communication request to the inverter		A	A	A	A	B	B
②	Inverter data processing time		Yes	Yes	Yes	No	Yes	Yes
③	Inverter return information (check data ① for error)	No error (accept request)	C	C	C	No	E	E
		Error (request denied)	D	D	D	No	D	D
④	Master computer processing delay time		No	No	No	No	No	No
⑤	The response transfered by the master computer to the returned information ③ (check data ③ for error)	No error (not processed)	No	No	No	No	C	C
		Error (output ③)	No	No	No	No	F	F

① Data of communication request sent by master computer to the inverter

Format	Number of data													
	1	2	3	4	5	6	7	8	9	10	11	12	13	14
A (Data write)	ENQ *1)	Inverter office number		Command code		Waiting time *2)	Data				Check code Sum check*7)		Stop character *3)	
B (Data read out)	ENQ *1)	Inverter office number		Command code		Waiting time *2)	Check code Sum check*7)		Stop character *3)					

③ Inverter return information

When writing data

Format	Number of data					
	1	2	3	4	5	6
C (data is correct)	ACK*1)	Inverter office number		Stop character *3)		
D (data error)	NAK*1)	Inverter office number		Error code *5)	Stop character *3)	

When reading data

Format	Number of data												
	1	2	3	4	5	6	7	8	9	10	11	12	13
E (data is correct)	STX*1)	Inverter office number		Read data				Increment *4)	ETX	Check code Sum check*7)		Stop character *3)	
D (data error)	NAK*1)	Inverter office number		Error code *5)	Stop character *3)								

⑤ Returned data from master computer to inverter when reading data

Format	Number of data				
	1	2	3	4	5
C (data is correct)	ACK*1)	Inverter office number		Stop character *3)	
F (data error)	NAK*1)	Inverter office number		Stop character *3)	

*1) Control code

Signal	ASCII code	Content	Signal	ASCII code	Content
NUL	H00	NULL	ACK	H06	Acknowledge
STX	H02	Start of Text	LF	H0A	Line Feed
ETX	H03	End of Text	CR	H0D	Carriage Return
ENQ	H05	Enquiry	NAK	H15	Negative Acknowledge

*2) The waiting time is set to 0~15, and the increment is 10ms. Example: 5--->50ms.

*3) Stop character (CR, LF code)

When performing data communication from the master computer to the inverter, the CR and LF codes at the end of the message will be automatically set according to the mode of the master computer. At this time, the inverter must also make necessary settings to cooperate with the master computer. If only CR is selected, only one register is occupied; If both CR and LF are selected, two registers will be occupied.

*4) increment: 0---> increment 1, 1---> increment 0.1, 2---> increment 0.01, 3---> increment 0.001.

*5) Error code:

Error code	Error item	Communication error content
H01	Error	The parity check of the data received by the inverter is different from the parity check initially set
H02	Sum Check Error	The Sum Check value calculated by the inverter according to the received data is different from the received Sum Check value
H03	Communication protocol error	The grammar of the data received by the inverter is incorrect; or the data has not been received within the specified time; or the CR and LF codes are different from those initially set
H04	Frame error	The stop bit of the data received by the inverter is inconsistent with the stop bit initially set
H05	Overflow error	When the inverter is receiving data (not all of the data have been received yet), the master computer transmits the next data to it.

Error code	Error item	Communication error content
H0A	Abnormal mode	Write when the inverter is running or the mode setting requirements are not met
H0B	Command code error	A command code that cannot be processed by the inverter is specified
H0C	Data range error	When setting parameters and frequencies, data outside the set range are specified

*6) If the parameter has the characteristic of 99999, when the data written or read is 99999, replace it with HFFFF.

*7)Sum check code

Sum Check Code is the ASCII 2-bit (hexadecimal system) converted code of the lower bit (lower 8-bit) of the result (summation) after the ASCII code of the data is converted and added with binary code.。

✓ Examples of communications:

Example 1: The master computer sends a forward rotation command to the inverter:

Step 1: The master computer sends FA command, using format A:

ENQ	Inverter office number 0	Command code HFA	Waiting time	Data H0002	Check code Sum Check	CR
H05	H30 H30	H46 H41	H30	H30 H30 H30 H32	H44 H39	H0D

Calculation of Sum Check: H30 + H30 + H46 + H41+H30+H30+H30+H30+H32=H1D9, take the lower 8-bit D9 and convert it into ASCII code H44 H39

Step 2: The inverter will reply to the master computer after receiving and processing without error, using format C:

ACK	Inverter office number 0	CR
H06	H30 H30	H0D

Example 2: The master computer sends a stop command to the inverter:

Step 1: The master computer sends FA command, using format A:

ENQ	Inverter office number 0	Command code HFA	Waiting time	Data H0000	Check code Sum Check	CR
H05	H30 H30	H46 H41	H30	H30 H30 H30 H30	H44 H37	H0D

Step 2: The inverter will reply to the master computer after receiving and processing without error, using format C:

ACK	Inverter office number 0	CR
H06	H30 H30	H0D

Example 3: the master computer reads the value of 02-15 (P.195):

Step 1: The master computer sends write and page change command, using format A:

ENQ	Inverter office number 0	Command code HFF	Waiting time	Data H0001	Check code Sum Check	CR
H05	H30 H30	H46 H46	H30	H30 H30 H30 H31	H44 H44	H0D

⇩

P.195 on page 1

Step 2: The inverter will reply to the master computer after receiving and processing without error, using format C:

ACK	Inverter office number 0	CR
H06	H30 H30	H0D

Step 3: The master computer requests the inverter to read the value of 02-15 (P.195), using format B:

ENQ	Inverter office number 0	Command code H5F	Waiting time	Check code Sum Check	CR
H05	H30 H30	H35 H46	H30	H30 H42	H0D

⇩

First, reduce 195 by 100 to obtain 95, then convert 95 into hexadecimal H5F, and then convert 5 and F into ASCII codes H35 and H46

Step 4: The inverter will transmit the content value of 02-15 (P.195) to the master computer after receiving and processing without error, using format E:

STX	Inverter office number 0	Read data H1770 (60Hz)	Unit	ETX	Check code Sum Check	CR
H02	H30 H30	H31 H37 H37 H30	H32	H03	H36 H31	H0D

Example 4: Change the content of 02-15 (P.195) to 50 (the default setting is 60)

Step 1~2 are the same as Step 1~2 of Example 3 (omitted) ;

Step 3: The master computer requests the inverter to write 50 into 02-15 (P.195), using format A:

ENQ	Inverter office number 0	Command code HDF	Waiting time	Data H1388	Check code Sum Check	CR
H05	H30 H30	H44 H46	H30	H31 H33 H38 H38	H45 H45	H0D

First, reduce 195 by 100 to obtain 95, and the minimum increment of 02-15(P.195) is 0.01, so 50×100=5000.

Convert 95 to hexadecimal H5F, then convert 5000 to hexadecimal H1388.

H5F+H80=HDF then convert 1, 3, 8 and 8 into ASCII code for transmission

Step 4: The inverter will reply to the master computer after receiving and processing without error, using format C:

ACK	Inverter office number 0	CR
H06	H30 H30	H0D

Example 5: write 02-15 (P.195) into 500 (the setting range of this parameter is 0~400)

Step 1~2 are the same as Step 1~2 of Example 3 (omitted).

Step 3: The master computer requests the inverter to write 500 into 02-15 (P.195), using format A:

ENQ	Inverter office number 0	Command code HDF	Waiting time	Data HC350	SUMCHECK	CR
H05	H30 H30	H44 H46	H30	H43 H33 H35 H30	H46 H35	H0D

Step 4: After receiving and processing by the inverter, it is determined that there is an error in the data range because the data exceeds the set range of 02-15 (P.195). The inverter will reply the error of data to the master computer, using format D:

NAK	Inverter office number 0	Error code H0C	CR
H15	H30 H30	H43	H0D

Note: In the above examples, the reading and writing of parameters 02-15 (P.195) are all explained by using P parameter mode. For using the parameter group mode, please note the difference between the page number and the parameter number. Please refer to the communication command list for relevant contents.

- ✓ Modbus protocol
- ✓ Data form

MODBUS serial transmission mode can be divided into ASCII (American Standard Code for Information Interchange) and RTU (Remote Terminal Unit)

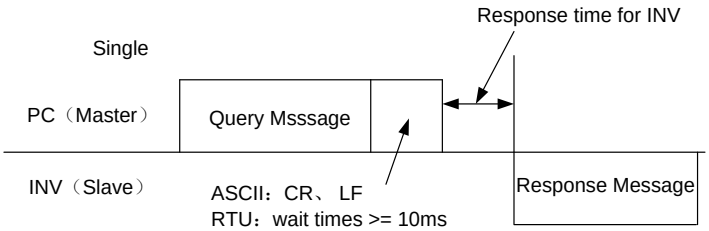

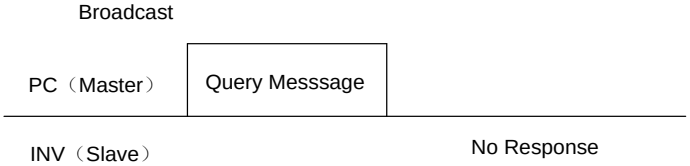

(1) Query

The master computer (master address) sends data to the Slave (slave address) with the specified address.

(2) Normal response

After receiving the query sent by Master, Slave preforms the requested function and returns the corresponding normal response to Master.

(3) Error Response

It is the response returned to Master when Slave receives invalid function code, address and data.

(4) Broadcast

After Master specifies address 0, it can send data to all Slave. All Slave that have received Master data will perform the requested function but will not return a respond to Master.

✓ Communication format:

In general, Master sends Query Message to the Slave, which returns Response Message to Master. During normal communication, address codes and function codes are copied. During abnormal communication, bit7 of the function code is set to “1” (=H80), and Data Byte is set to error code.

✓ Message composition:

Form	Starting	① Address	② Function	③ Data	④ Error check	Termination
ASCII	H3A	8 bits	8 bits	n×8 bits	2×8 bits	0D 0A
RTU	>=10ms					>=10ms

Information	Content
① Address information group	Setting range: 0~254, 0 is for broadcast address, 1~254 for slave device (inverter) address. 07-01 is used to set the Slave device address when the Master device sends information to the Slave device and the Slave device replies information to the Master device.
② Function information group	At present, there are only the following four functions. The Slave device acts according to the request of the Master device. If the Master device sets a function code other than the following table, the Slave device will return an error response. For the response returned from the Slave device, the normal function code will be returned when the response is normal, and H80+ function code will be returned when the response is wrong. Function name / Function code / Functional description Read multiple registers / H03 / Can read the contents of successive registers of the Slave Write a single register / H06 / Data can be written to a single register of the Slave Function detection / H08 / Perform functional detection (communication check only) Write multiple registers / H10 / Data can be written to multiple consecutive registers of the Slave
③ Data information group	According to the change of the function code, including the initial address, the number of registers written and read, the data written, etc.
④ Error checking information group	ASCII is LRC check mode and RTU is CRC check mode.

Calculation of LRC check value in ASCII mode:

LRC check method is relatively simple, which is used in ASCII mode and can detect all contents in the information domain except the starting colon and the ending carriage return character. The method is to superimpose each data to be transmitted according to bytes (not ASCII code). If the obtained result is greater than hexadecimal H100, remove the excess part (for example, if hexadecimal H136 is obtained, only retain H36), obtain the inverse code the remaining part and add 1 to it.

Calculation of CRC check value in RTU mode:

1. Add a 16-bit register with every bit set to 1.
2. Perform an xor operation between the upper byte of the 16-bit register and the initial 8-bit byte, the result of which is put into this 16-bit register.
3. Move this 16-bit register one bit to the right.

4. If the bit moved to the right (marked bit) is 1, perform an xor operation between the generated polynomial 1010000000000001 with this register. If the bit moved to the right is 0, 3 will be returned.
5. Repeat steps 3 and 4 until 8 bits are removed.
6. Perform an xor operation between another 8 bits with this 16-bit register.
7. Repeat steps 3 to 6 until all bytes of the message are performed xor operation with the 16-bit register and bit has been moved for 8 times.
8. The content of this 16-bit register is the 2-byte CRC error check code, which will be added to the highest significant bit of the message.
When adding CRC to the message, the low byte is added first, then the high byte.

✓ Communication format:

1. Data readout (H03)

Mode	Starting	Address *1)	Function*2)	Start address*3)	Number of registers *4)	Check	Termination
ASCII	H3A	2char	2char	4char	4char	2char	0D 0A
RTU	>=10ms	8bit	8bit	2byte	2byte	2byte	>=10ms

Normal response

Mode	Starting	Address *1)	Function *2)	Read data number *5)	Read data *6)		Check	Termination
ASCII	H3A	2char	2char	2char	4char	…2N×8bit	2char	0D 0A
RTU	>=10ms	8bit	8bit	1byte	2byte	…N×8bit	2byte	>=10ms

Information	Setting content
*1)Address	Set the address for sending information, 0 is invalid
*2)Function code	H03
*3)Start address	Set to the address of the register to be read
*4)Number of registers	Set the number of registers to be read. The maximum number that can be read is 20.
*5)Read data number	Twice as much as *4)
*6)Read data	Set the data specified in *4)and read the data from high byte to low byte.

2. Data writing (H06)

Mode	Starting	Address *1)	Function *2)	Start address *3)	Write data *4)	Check	Termination
ASCII	H3A	2char	2char	4char	4char	2char	0D 0A
RTU	>=10ms	8bit	8bit	2byte	2byte	2byte	>=10ms

Normal response

Mode	Starting	Address *1)	Function *2)	Start address *3)	Write data *4)	Check	Termination
ASCII	H3A	2char	2char	4char	4char	2char	0D 0A
RTU	>=10ms	8bit	8bit	2byte	2byte	2byte	>=10ms

Information	Setting content
*1) Address	Set the address for sending information
*2) Function code	H06
*3)Start address	Set as the start address of the register that needs to be written
*4) Write data	Write data to the specified register, fixed at 16bit.

Note: The content of the normal response is the same as the query information

3. Write multiple registers (H10)

Mode	Starting	Address *1)	Function *2)	Start address *3)	Number of registers *4)	Number of data*5)	Write data *6)		Check	Termination
ASCII	H3A	2char	2char	4char	4char	2char	4char	…2N×8bit	2char	0D 0A
RTU	>=10ms	8bit	8bit	2byte	2byte	1byte	2byte	…N×16bit	2byte	>=10ms

Normal response

Mode	Starting	Address *1)	Function *2)	Start address *3)	Number of registers *4)	Check	Termination
ASCII	H3A	2char	2char	4char	4char	2char	0D 0A
RTU	>=10ms	8bit	8bit	2byte	2byte	2byte	>=10ms

Information	Setting content
*1) Address	Set the address for sending information
*2) Function code	H10
*3) Start address	Set as the start address of the register that needs to be written
*4) Number of registers	Sets the number of registers written. The maximum number of registers that can be written is 20.
*5) Number of data	The setting range is 2~24. Set 2 times the value specified in *4).
*6) Write data	Set data division specified in *4). Write data is set in the order of high byte to low byte. Setting is performed in the order of starting address data, starting address +1 data, starting address +2 data ...

4. Function detection (H08)

In order to send the query information, the query information (function of subfunction code H00) is returned as it is, and communication check can be performed.

Sub-function code H00 (return of query data)

Query information

Mode	Starting	Address *1)	Function *2)	Sub-function *3)	Data*4)	Check	Termination
ASCII	H3A	2char	2char	4char	4char	2char	0D 0A
RTU	>=10ms	1byte	1byte	2byte	2byte	2byte	>=10ms

Normal response

Mode	Starting	Address *1)	Function *2)	Sub-function *3)	Data *4)	Check	Termination
ASCII	H3A	2char	2char	4char	4char	2char	0D 0A
RTU	>=10ms	1byte	1byte	2byte	2byte	2byte	>=10ms

Query information setting

Information	Setting content
*1) Address	Set the address for sending information, but be unable to broadcast communication (0 is invalid)
*2) Function code	H08
*3)Sub-function code	H0000
*4) Data	The data can be set arbitrarily if the length is 2 byte. The set range is H0000~HFFFF.

5. Response of error

If the error content is contained in the function, address and data received from the device, the error response shall be made; However, when using function code H03 or H10 to access more than one address, if one or more data can be operated, it will not be regarded as an error.

Mode	Starting	Address *1)	Function *2) H80+ Function	Error code *3)	Check	Termination
ASCII	H3A	2char	2char	2char	2char	0D 0A
RTU	>=10ms	8bit	8bit	8bit	2byte	>=10ms
Information	Setting content					

*1) Address	Set the address for sending information
*2) Function code	Function code + H80 set by the Master
*3) Error code	Set to the code in the following table

Error code list:

Source	Code	Meaning	Remark
Slave computer reply	H01	Illegal function code	In the query information sent by the main device, set the function code that cannot be processed by the slave device. Function codes are not H03, H06, H08, H10 (provisional).
	H02	Illegal data address	In the query information sent by the main device, set the address that cannot be processed by the slave device (in addition to the addresses listed in the register address table, the parameters reserved, the parameters not allowed to be read, and the parameters not allowed to be written).
	H03	Illegal data value	In the query information sent by the main device, set the data that cannot be processed by the slave device (outside the parameter writing range, there are specified mode, other error, etc.).

Note: When parameters are read multiple times, it is not an error even if they are reserved parameters.

For the data sent by the Master, the Slave (inverter) will detect the following errors, but will not respond when it detects the error.

Error detection item table:

Error item	Error content
Parity error	The parity check of the data received by the inverter is different from the parity check initially set
Frame error	The stop bit length of the data received by the inverter does not match the stop bit length initially set.
Overflow error	When the inverter is receiving data (not all of the data have been received yet), the master computer transmits the next data to it.
Check error	The LRC/CRC check result calculated by the inverter according to the received data is inconsistent with the received LRC/CRC check result

✓ Examples of communications:

Example 1: The write operation mode of communication is CU (Communication)

Step 1: The master computer modifies the mode of the inverter

Mode	Starting	Address	Function	Start address		Write data		Check	Stop
ASCII	H3A	H30 H31	H30 H36	H31H30	H30 H30	H30 H30	H30 H30	H45 H39	0D 0A
RTU	>=10ms	01	06	10	00	00	00	8D 0A	>=10ms

Step 2: The inverter will reply message to the master computer after receiving and processing without error

Mode	Starting	Address	Function	Start address		Write data		Check	Stop
ASCII	H3A	H30 H31	H30 H36	H31H30	H30 H30	H30 H30	H30 H30	H45 H39	0D 0A
RTU	>=10ms	01	06	10	00	00	00	8D 0A	>=10ms

Example 2: the master computer reads the value of parameter 02-15 (P.195)

Step1: The master computer sends information to the inverter, requesting to read the value of 02-15 (P.195). The address of 02-15 (P.195) is H00C3.

Mode	Starting	Address	Function	Start address		Number of registers		Check	Stop
ASCII	H3A	H30 H31	H30 H33	H30H30	H43 H33	H30 H30	H30 H31	H33 H38	0D 0A
RTU	>=10ms	01	03	00	C3	00	01	74 36	>=10ms

Step 2: The inverter will send the contents of 02-15 (P.195) to the master computer after receiving and processing without error

Mode	Starting	Address	Function	Read data number	Read data		Check	Stop
ASCII	H3A	H30 H31	H30 H33	H30 H32	H31 H37	H37 H30	H37 H33	0D 0A
RTU	>=10ms	01	03	02	17	70	B6 50	>=10ms

Converting H1770 into decimal is 6000, and the increment of 02-15 (P.195) is 0.01, so 6000×0.01=60, that is, the value of 02-15 (P.195) is 60.

Example 3: Change the content of 02-15 (P.195) to 50

Step 1: The master computer sends information to the inverter, requesting to write 50 into 02-15 (P.195).

Communication parameter group 07

Mode	Starting	Address	Function	Start address		Write data		Check	Stop
ASCII	H3A	H30 H31	H30 H36	H30H30	H43 H33	H31 H33	H38 H38	H39 H42	0D 0A
RTU	>=10ms	01	06	00	C3	13	88	74 A0	>=10ms

Step 2: The inverter will reply to the master computer after receiving and processing without error

Mode	Starting	Address	Function	Start address		Write data		Check	Stop
ASCII	H3A	H30 H31	H30 H36	H30H30	H43 H33	H31 H33	H38 H38	H39 H42	0D 0A
RTU	>=10ms	01	06	00	C3	13	88	74 A0	>=10ms

Example 4: The master computer reads the value of parameters 01-10 (P.0), 01-00 (P.1), 01-01 (P.2), 01-03 (P.3), 04-00~04-02/P.4~P.6, 01-06~01-07/P.7~P.8, 06-00 (P.9), 10-00~10-01/P.10~P.11.

Step 1: The master computer sends information to the inverter, requesting to read the value of 01-10 (P.0), 01-00 (P.1), 01-01 (P.2), 01-03 (P.3), 04-00~04-02/P.4~P.6, 01-06~01-07/P.7~P.8, 06-00 (P.9), 10-00~10-01/P.10~P.11, and the starting address is H0000.

Mode	Starting	Address	Function	Start address		Number of registers		Check	Stop
ASCII	H3A	H30 H31	H30 H33	H30H30	H30 H30	H30 H30	H30 H43	H46 H30	0D 0A
RTU	>=10ms	01	03	00	00	00	0C	45 CF	>=10ms

Step 2: The inverter will reply message to the master computer after receiving and processing without error

Mode	Starting	Address	Function	Read data number	Read data	Check	Stop
ASCII	H3A	H30 H31	H30 H33	H31 H38	…12×4 char	2char	0D 0A
RTU	>=10ms	01	03	18	…12×2 byte	2byte	>=10ms

Example 5: The master computer modifies the value of parameters 01-10 (P.0), 01-00 (P.1), 01-01 (P.2), 01-03 (P.3), 04-00~04-02/P.4~P.6, 01-06~01-07/P.7~P.8, 06-00 (P.9), 10-00~10-01/P.10~P.11

Step 1: The master computer sends information to the inverter, requesting to write the value of 01-10 (P.0), 01-00 (P.1), 01-01 (P.2), 01-03 (P.3), 04-00~04-02/P.4~P.6, 01-06~01-07/P.7~P.8, 06-00 (P.9), 10-00~10-01/P.10~P.11

Mode	Starting	Address	Function	Start address		Number of registers		Number of data	Write data	Check	Termination
ASCII	H3A	H30 H31	H31 H30	H30H30	H30 H30	H30 H30	H30 H43	H31 H38	…N×4 char	2char	0D 0A
RTU	>=10ms	01	10	00	00	00	0C	18	…N×2byte	2byte	>=10ms

Step 2: The inverter will reply message to the master computer after receiving and processing without error

Mode	Starting	Address	Function	Start address		Number of registers		Check	Stop
ASCII	H3A	H30 H31	H31 H30	H30H30	H30 H30	H30 H30	H30 H43	H45 H33	0D 0A
RTU	>=10ms	01	10	00	00	00	0C	00 18	>=10ms

Note: In the above examples, the reading and writing of parameters 02-15 (P.195) are all explained by using P parameter mode. For using the parameter group mode, please note the difference of the address. Please refer to the communication command list for relevant contents.

◆ Communication command list

Set the following command codes and data, so as to perform various operation control, monitoring, etc.

Item		Shihlin protocol command code	Modbus command code	Modbus address	Information content and function description
Operation mode readout		H7B	H03	H1000	H0000: Communication mode; H0001: External mode; H0002: JOG mode H0003: Mixed 1 mode H0004: Mixed 2 mode H0005: Mixed 3 mode H0006: Mixed 4 mode H0007: Mixed 5 mode H0008: PU mode b15 / b14 ~ b12 / b11 ~ b8 / b7 ~ b0 1 / Setting values of parameter 00-18 / Setting values of parameter 00-17 / 00000000 : The second operation mode.
Operation mode write		HFB	H06/H10		
Inverter status monitoring		H7A	H03	H1001	H0000~H00FF b15: tuning in process b14: inverter in reset process b13, b12: reserve b11: inverter EO status b10: PLC operation b9: inverter under voltage b8: inverter voltage stall b7: abnormal occurrence b6: frequency detection b5: reserve b4: overload b3: frequency arrival b2: in the reverse rotation process b1: in the forward rotation process b0: in operation
Target frequency write	EEPROM	HEE	H06/H10	H1009	H0000~ HFDE8: 0~650Hz
	RAM	HED		H1002	
Special monitoring selection code readout		H7D	H03	H1013	H0000~H0010: Monitoring selection data Please refer to the Special monitoring code table for special monitoring selection code readout (H0009 reserve)
Special monitoring selection code writing		HF3	H06/H10		
Monitor external operation status		H7C	H03	H1012	H0000~H000F: b15~b4 / b3 / b2 / b1 / b0 0000 0000 0000 / MRS / STR / STF / RES
Inverter reset		HFD	H06/ H10	H1101	H9696: that is, the function of 00-02=2/P.997=1 When communicating with the master computer, the inverter cannot return the data to the master computer at this time because the inverter is reset.
Parameter clearing		HFC	H06/ H10	H1104	H5A5A H5566 H5959
				H1103	H9966
				H1106	H9696 H99AA H9A9A
				H1105	H55AA
				H1102	HA5A5

Please refer to the parameter recovery table for details.

Item	Shihlin protocol command code	Modbus command code	Modbus address	Information content and functional description
Parameter readout	H00~H63	H03	P parameter mode: H0000~H0513 Parameter group mode: H2710~H2D4F	1. Please refer to the parameter table for data range and decimal point position 2. The Modbus address of each parameter in the P parameter mode corresponds to the hexadecimal value of the parameter number. For example, Modbus address of 04-26 (P.138) is H008A. 3. Modbus address of each parameter in parameter group mode corresponds to the hexadecimal value of parameter number +10000. For example, Modbus address of 04-26 (P.138) is 0x28BA.
Parameter writing	H80~HE3	H06/ H10		
Linear velocity feedback readout	---	---	---	---
Linear velocity feedback write				
Linear velocity target value readout	---	---	---	---
Linear velocity target value write				
Tension given readout	---	---	---	---
Tension given write				
Torque given readout	---	--	--	--
Torque given write		--		
Asynchronous serial communication circuit test	---	H08	(Sub-function code of circuit detection)	The content can be any numerical value (H0000~HFFFF)
Run command write	HFA	H06/ H10	H1001	H0000~HFFFF b8~b15: reserve b7: inverter emergency stop (MRS) b6: Second function (RT) b5: High speed (RH) b4: Medium speed (RM) b3: Low speed (RL) b2: Reverse rotation (STR) b1: Forward rotation (STR) b0: reserve
Monitor real-time data of INV	---	H03	H1014~H1027	The monitoring values corresponding to each Modbus address are as follows: H1014: Input port status of the digital input terminal H1015: Output port status of the digital output terminal H1016: Input voltage of terminal 2-5 H1017: Input current/voltage of terminal 4-5 H1018: Output voltage/current of terminal AM1-5 H1019: DC bus voltage H101A: Inverter electronic thermal rate H101B: Inverter output power H101C: Temperature rising accumulation rate of the inverter H101D: NTC temperature accumulation of inverter H101E: Motor electronic thermal rate H101F: Target pressure of PID control H1020: Feedback pressure of PID control H1021: Reserve H1022: Input frequency of terminal HDI H1023: Reserve H1024: Output voltage/current at terminal AM2-5 H1025: Output torque of inverter H1026: Input voltage of terminal 3-5 H1027: Version of EP301 communication card (optional)

Item			Shihlin protocol command code	Modbus command code	Modbus address	Information content and function description
Page change for reading and writing parameters		Read	H7F	---	---	P parameter mode: H0000: P.0~P.99; H0001: P.100~P.199; H0002: P.200~P.299; H0003: P.300~P.399; H0004: P.400~P.499; H0005: P.500~P.599; H0006: P.600~P.699 H0007: P.700~P.799 H0008: P.800~P.899 H0009: P.900~P.999 H000A: P.1000~P.1099 H000B: P.1100~P.1199 H000C: P.1200~P.1299 Parameter group mode: H0064: 00-00~00-99; H0065: 01-00~01-99; H0066: 02-00~02-99; H0067: 03-00~03-99; H0068: 04-00~04-99; H0069: 05-00~05-99; H006A: 06-00~06-99 H006B: 07-00~07-99 H006C: 08-00~08-99 H006D: 09-00~09-99 H006E: 10-00~10-99 H006F: 11-00~11-99 H0070: 12-00~12-99 H0071: 13-00~13-99 H0072: 14-00~14-99 H0073: 15-00~15-99
		Write	HFF			
Monitoring	Set frequency	EEPROM	H73	H03	H1009	H0000~HFDE8 (If 00-08(P.37)=0, it is 2 decimals, and if it is not zero, it is 1 decimal)
		RAM	H6D		H1002	
	Output frequency		H6F		H1003	H0000~H9C40 (the same as above)
	Output current		H70		H1004	H0000~HFFFF (2 decimals)
	Output voltage		H71		H1005	H0000~HFFFF (2 decimals)
	Abnormal content		H74		H1007	H0000~HFFFF: Abnormal codes for the past two times H74/H1007: Abnormal codes 1 and 2; b15 b8 b7 b0 Second abnormal code | Latest abnormal code H75/H1008: Abnormal codes 3 and 4; b15 b8 b7 b0 The fourth abnormal code | The third abnormal code For abnormal codes, please refer to the abnormal code table in the alarm record parameters 06-40~06-43.
			H75		H1008	

◆ Parameter recovery table

Data content	P parameter operation	Communication p parameter (Note 1)	Table 1 (Note 2)	Table 2 (Note 2)	User registered parameter	Other p parameter	Error code
H5A5A	00-02=4(P.999=1)	o	x	x	o	o	x
H5566	00-02=5(P.999=2)	o	x	o	x	o	x
H5959	00-02=6(P.999=3)	o	x	x	x	o	x
H9966	00-02=3(P.998=1)	o	x	o	o	o	x
H9696	Communication 999 1	x	x	x	o	o	x
H99AA	Communication 999 2	x	x	o	x	o	x
H9A9A	Communication 999 3	x	x	x	x	o	x
H55AA	Communication 998	x	x	o	o	o	x
HA5A5	00-02=1(P.996=1)	x	x	x	x	x	o

Note: 1. Communication P parameters include 07-02 (P.32), 07-00 (P.33), 07-01 (P.36), 07-03 (P.48)~07-09 (P.53), 00-16 (P.79), 7-10 (P.153) and 07-07 (P.154)

2. For table 1 and table 2 here, please refer to table 1 and table 2 in 5.1.2.

◆ Special monitoring code table

Data	Content	Unit
H0000	Input port status of the digital input terminal	Note 1
H0001	Output port status of the digital output terminal	Note 2
H0002	Input voltage of terminals 2-5	0.01V
H0003	Input current/voltage of terminals 4-5	0.01A/0.01V
H0004	Output voltage of terminals AM1-5	0.01V
H0005	DC bus voltage	0.1V
H0006	Electronic thermal rate	---
H0007	Temperature rising accumulation rate of the inverter	0.01
H0008	Output power	0.01kW
H0009	NTC temperature accumulation of inverter	0.01
H000A	Motor electronic thermal rate	---
H000B	PID target pressure	0.1%
H000C	PID feedback pressure	0.1%
H000D	Reserve	---
H000E	Input frequency of terminal HDI	0.01kHz
H000F	Reserve	---
H0010	Output voltage of terminal AM2-5	0.01V
H0011	Output torque of inverter	0.1%
H0012	Input voltage of terminal 3-5	0.01V
H1013	Version of the communication card (optional)	---

Note: 1. Input port status content of digital input terminal

b15	b14	b13	b12	b11	b10	b9	b8	b7	b6	b5	b4	b3	b2	b1	b0
0	0	0	0	0	0	HDI	M5	M4	M3	RES	M2	M1	M0	STR	STF

2. Output port status content of digital output terminal

b15	b14	b13	b12	b11	b10	b9	b8	b7	b6	b5	b4	b3	b2	b1	b0
0	0	0	0	A17	A16	A15	A14	A13	A12	A11	A10	ABC2	SO2	ABC1	SO1
				SLOT3 expanded digital output											

5.8.2 Communication EEPROM write selection

➢ Perform the setting when frequent parameter changes are required.

Parameter	Name	Default	Setting range	Content
07-11 P.34	Communication EEPROM write-in selection	0	0	When writing parameters through communication, write EEPROM and RAM.
			1	When writing parameters through communication, write into RAM.

Setting Communication EEPROM write selection function

◆ When writing parameters through the terminal RS-485 of the inverter, the parameter memory storage can be changed from EEPROM+RAM to RAM only.

◆ In case of frequent parameter changes, please set the value of 07-11(P.34) communication EEPROM write selection to 1. If this value is set to 0 (EEPROM write), frequent parameter writing will shorten the life of EEPROM.

Note: When setting 07-11 (P.34) =1 (RAM only), if the power of the inverter is turned off, the contents of the changed parameters will disappear. Therefore, when the power is turned on again, the contents of the parameters will be the value previously saved in EEPROM.

5.8.3 Canopen protocol

➢ It is the relevant setting when using Canopen communication card (optional)

Parameter	Name	Default	Setting range	Content
07-15 P.800	CANopen slave address	0	0~127	---
07-16 P.801	CANopen rate	0	0	1Mbps
			1	500Kbps
			2	250Kbps
			3	125Kbps
			4	100Kbps
			5	50Kbps
07-17 P.802	CANopen communication status	0	0	Node retry status
			1	Communication retry status
			2	Retry completion status
			3	Pre-operation status
			4	Operating status
			5	Stop status
07-18 P.803	CANopen control status	0	0	Boot not completed status
			1	Forbidden operation state
			2	Pre-excitation status
			3	Excitation state
			5	Allowed operating state
			7	Quick action stop status
			13	Trigger error action status
			14	Error status

Settin Canopen protocol

◆ Parameters 07-17(P.802) and 07-18(P.803) are Read only parameters, which are used to monitor the status of Canopen communication card (optional) in use.

5.8.4 Communication expansion card version number

➢ It is used to display the current software program version number of the communication expansion card

Parameter	Name	Default	Setting range	Content
07-44 P.829	Version of EP301 communication card (optional)	Read only	Read only	It is used to display the current software program version number of the communication expansion card, read only.

5.8.5 Ethernet communication

➢ Relevant setting when using EP301 communication expansion card

Parameter	Name	Default	Setting range	Content
07-45 P.830	IP configuration	0	0	Static IP
			1	Dynamic IP
07-46 P.831	IP address 1	192	0~255	
07-47 P.832	IP address 2	168	0~255	
07-48 P.833	IP address 3	2	0~255	
07-49 P.834	IP address 4	102	0~255	
07-50 P.835	Subnet mask 1	255	0~255	
07-51 P.836	Subnet mask 2	255	0~255	
07-52 P.837	Subnet mask 3	255	0~255	
07-53 P.838	Subnet mask 4	0	0~255	
07-54 P.839	Default gateway 1	192	0~255	
07-55 P.840	Default gateway 2	168	0~255	
07-56 P.841	Default gateway 3	2	0~255	
07-57 P.842	Default gateway 4	100	0~255	

Setting Ethernet communication setting

◆ For description on the parameters 07-45(P.830)~07-57(P.842), please refer to the EP301 EtherNet communication extension card instruction book.

5.9 PID parameter group 08

Parameter group	Parameter number	Parameter name	Setting range	Default	Reference page
08-00	P.170	PID function selection	0: No PID function selected	0	210
			0X: Setting target value of parameter 08-03 (P.225)		
			1X: Terminal 2-5 input as the target source		
			2X: Terminal 4-5 input as the target source		
			3X: Terminal 3-5 input as the target source		
			4X: Terminal HDI input as the target source		
			X1: Terminal 2-5 input as feedback source		
			X2: Terminal 4-5 input as feedback source		
			X3: Terminal 3-5 input as feedback source		
08-01	P.171	PID feedback control mode	0: PID negative action	0	210
			1: PID positive action		
08-02	P.241	PID sampling period	0~60000ms	20ms	211
08-03	P.225	PID target value panel reference	0~08-43(P.251)	20.0%	211
08-04	P.172	Proportional gain	0.1%~1000.0%	20.0%	211
08-05	P.173	Integral time	0~60.00s	1.00s	211
08-06	P.174	Differential time	0~10000ms	0ms	211
08-07	P.175	Abnormal deviation	0~100.0%	0.0%	211
08-08	P.176	Abnormal duration time	0~600.0s	30.0s	211
08-09	P.177	Abnormal processing mode	0: Stop freely	0	211
			1: Slow down to stop		
			2: Alarm and continue operation		
08-10	P.178	Sleep detection deviation	0~100.0%	0.0%	211
08-11	P.179	Sleep detection duration time	0~255.0s	1.0s	211
08-12	P.180	Wake-up level	0~100.0%	90.0%	211
08-13	P.181	Stop level	0~120.00Hz	40.00Hz	211
08-14	P.182	Upper integral limit	0~200.0%	100.0%	211
08-15	P.183	Deceleration step length when stable	0~10.00Hz	0.50Hz	211
08-16	P.221	Lower limit of pressure sampling value	0~65535	0	211
08-17	P.222	Upper limit pressure sampling value	0~65535	0	211
08-18	P.223	Analog feedback signal bias	0~100.0%	0.0%	211
08-19	P.224	Analog feedback signal gain	0~100.0%	100.0%	211
08-20	P.641	Proportional gain P2	0.1%~1000.0%	20.0%	215
08-21	P.642	Integral time I2	0~60.00s	1.00s	215
08-22	P.643	Differential time D2	0~10000ms	0ms	215

Parameter group	Parameter number	Parameter name	Setting range	Default	Reference page
08-24	P.711	PID target filtering time	0~650.00s	0.00s	215
08-25	P.712	PID feedback filtering time	0~60.00s	0.00s	215
08-26	P.713	PID output filtering time	0~60.00s	0.00s	215
08-27	P.714	PID bias control limit	0~100.00%	0.00%	216
08-28	P.715	Integral separation attribute	0: No integral separation 1: Integral separation	0	216
08-29	P.716	Integral separation point	0~100.00%	50.00%	216
08-30	P.717	PID differential limit	0~100.00%	0.10%	216
08-31	P.718	PID output positive deviation limit	0~100.00%	100.00%	217
08-32	P.719	PID output negative deviation limit	0~100.00%	100.00%	217
08-33	P.720	PID parameter switchover operation selection	0: No PID parameter switchover 1: PID parameter switchover by deviation	0	217
08-34	P.721	PID parameter switchover deviation lower limit	0~100.00%	20.00%	217
08-35	P.722	PID parameter switchover deviation upper limit	0~100.00%	80.00%	217
08-36	P.723	PID disconnection operation option 1	0: Select no need to run to the upper limit when PID is disconnected 1: Select the need to run to the upper limit when PID is disconnected	1	218
08-39	P.726	PID shutdown operation action selection	0: PID shutdown without operation 1: PID shutdown with operation	0	218
08-40	P.727	PID allowed reverse rotation action selection	0: PID does not allow reverse rotation 1: PID allows reverse rotation	0	218
08-41	P.728	PID negative integral limit	0~100.0%	0.0%	218
08-42	P.729	PID minimum output frequency	0~10.00Hz	0.00Hz	218
08-43	P.251	PID pressure range (Bar) setting	1.0~100.0	100.0	219
08-44	P.252	PID unit selection	0: % 1: bar 2: empty 3: kgs 4: kg 5: psi 6: Pa 7: kPa 8: MPa 9: C	0	219

Parameter group	Parameter number	Parameter name	Setting range	Default	Reference page
08-45	P.253	Analog signal feedback loss detection time	0.0~600.0s	0.0s	220
08-46	P.254	Analog signal feedback loss action selection	0: Alarm AErr and inverter stop freely 1: Slow down to stop then alarm AErr 2: Alarm AErr and continue operation	0	220

5.9.1 PID function selection

➢ The inverter can control the process of flow, air volume or pressure. The feedback system controlled by PID is composed of the target of terminal digital input signal or parameter set value and the feedback quantity of digital input signal.

Parameter	Name	Default	Setting range	Content
08-00 P.170	PID function selection	0	0	No PID function selected
			0x	Setting target value of parameter 08-03 (P.225)
			1x	Terminal 2-5 input as the target source
			2x	Terminal 4-5 input as the target source
			3x	Terminal 3-5 input as the target source
			4x	Terminal HDI input as the target source
			x1	Terminal 2-5 input as feedback source
			x2	Terminal 4-5 input as feedback source
			x3	Terminal 3-5 input as feedback source
08-01 P.171	PID feedback control mode	0	0	PID negative action
			1	PID positive action

Setting PID function selection

◆ During PID control operation, the frequency display content of the keypad display screen indicates the output frequency of the inverter.

◆ Please refer to the description in 02-10(P.60) , 02-22(P.528), 02-31(P.527) for filtering of input signals of terminals 2-5, 4-5 and 3-5.

Note: When selecting the source of target pressure and feedback pressure, please pay attention to the settings of 08-00(P.170) and 02-00(P.500)~02-02(P.504). The priority of terminals is 2-5 > 4-5 >3-5.

5.9.2 PID parameter group 1

➢ Users can easily realize automatic adjustment of process control by setting PID parameters.

Parameter	Name	Default	Setting range	Content
08-02 P.241	PID sampling period	20ms	0~6000ms	Refer to the feedback sampling period, and the adjuster operates once in each sampling period. The larger the sampling period, the slower the response.
08-03 P.225	PID target value panel reference	20.0%	0~08-43(P.251)	If the tens digit of 08-00 (P.170) is 0 and the units digit of 08-00 (P.170) is not 0, the target value will be set by 08-03(P.225).
08-04 P.172	Proportional gain	20.0%	0.1%~1000.0%	This gain determines the response degree of the proportional controller to the feedback error. The greater the gain, the faster the response, but too much gain will produce oscillation.
08-05 P.173	Integral time	1.00s	0~60.00s	This parameter is used to set the integral time of the integral controller. If the integral gain is too large, the integral effect will be too weak to eliminate the steady-state error. If the integral gain is relatively small, the system oscillation times will increase. If the integration gain is too small, the system may be unstable.
08-06 P.174	Differential time	0ms	0~10000ms	This gain determines the response degree of the differential controller to the error variation. Appropriate differential time can reduce the overshoot of the proportional controller and the integral controller, so that the oscillation can be quickly attenuated and stabilized. However, if the differential time is too large, it can cause system oscillation.
08-07 P.175	Abnormal deviation	0.0%	0~100.0%	---
08-08 P.176	Abnormal duration time	30.0s	0~600.0s	---
08-09 P.177	Abnormal processing mode	0	0	Stop freely
			1	Slow down to stop
			2	Alarm and continue operation
08-10 P.178	Sleep detection deviation	0.0%	0~100.0%	---
08-11 P.179	Sleep detection duration time	1.0s	0~255.0s	---
08-12 P.180	Wake-up level	90.0%	0~100.0%	---
08-13 P.181	Stop level	40.00Hz	0~120.00Hz	---
08-14 P.182	Upper integral limit	100.0%	0~200.0%	When the error value accumulates with the integral time, the upper error accumulation limit should be limited. If it is frequency, the upper integral limit=01-03(P.3) * 08-14
08-15 P.183	Deceleration step length when stable	0.50Hz	0~10.00Hz	When the pressure feedback meets the stop detection deviation and reaches the set seconds for the stop detection time, the inverter will take 08-15 (P.183) as the step length to reduce the frequency.
08-16 P.221	Lower limit of pressure sampling value	0	0~65535	---
08-17 P.222	Upper limit pressure sampling value	0	0~65535	---
08-18 P.223	Analog feedback signal bias	0.0%	0~100.0%	Calibrate the feedback signal, unify the measuring range of the inverter feedback terminal and the actual feedback signal, and make the display of the inverter and the feedback instrument consistent.
08-19 P.224	Analog feedback signal gain	100.0%	0~100.0%	

Setting PID parameter group 1

◆ Description of calibration of analog feedback signal:

Please refer to 5.3.5~5.3.8 for the selection and processing of analog inputs.

1. The user refuses to receive the feedback signal

Example 1: the user selects 2-5 to give a feedback signal of 0~7V

First set the proportion parameter 02-14(P.194) =0%, 02-15(P.195) =100%;

Then set the voltage parameter 02-12(P.192) =0, 02-13(P.193) =7.

Example 2: the user selects terminal 4-5 to give feedback signal of 0~20mA

First set the proportion parameter 02-27(P.196) =0%, 02-28(P.197) =100% ;

Then set the current parameter 02-25(P.198) =0, 02-26(P.199) =20.

2. The user needs to calibrate the feedback signal

Example 3: the feedback range of the user is 0~10kg (connected with 3-5 analog inputs)

Adjust feedback signal to 0kg, write parameter 02-36 (P.546) = 0%

Adjust feedback signal to 10kg, write parameter 02-37 (P.547) = 0%

Note: 1. If the user wants to adjust the analog input to correspond to a certain proportional relationship, he/she needs to adjust the analog input first and then set the corresponding proportional parameter. At this time, the inverter will automatically calculate the voltage parameter without user setting. If the user wants to set the proportional relation without the step of adjusting the analog input, he/she must first set the proportional parameter and then set the voltage parameter.

2. If the user wants to carry out calibration as in Example 3, the actual feedback signal must be connected.

3. During PID calibration, the calibration value must be the upper and lower limits of the selected signal.

4. If terminal 4-5 is selected as the target source or feedback source, please be sure to first set the value of 02-20(P.17) (collocating with SW2), select the signal of terminal 4-5 as voltage/current, and then perform other operations.

5. If terminal 3-5 is selected as the target source or feedback source, please be sure to first set the value of 02-29(P.531) (collocating with SW1), select the signal of terminal 3-5 as voltage/current, and then perform other operations.

◆ Explanation of the target pressure given by external analog

1. The target given by 2-5 (02-00(P.500)=3 and 08-00(P.170)=1X)

Set 02-08(P.73)=0, then the given measuring range is 0~5V corresponding to 0~08-43(P.251);

Set 02-08(P.73)=1, and the given measuring range is 0~10V corresponding to 0~08-43(P.251).

2. The target given by 4-5 (02-01(P.501)=3 and 08-00(P.170)=2X)

Set 02-20(p.17)=0, and the given range is 4-20mA, corresponding to 0~08-43(P.251);

Set 02-20(p.17)=1, 0~10V corresponds to 0~08-43(P.251);

Set 02-20(p.17)=2, and the given range is 0~5V, corresponding to 0~08-43(P.251).

3. The target is given by 3-5 (02-02(p.504) = 3,08-00(p.170) = 3X

Set 02-29(p.531)=0, and the given range is 4-20mA, corresponding to 0~08-43(P.251);

Set 02-29(p.531)=1, and the given range is 0~10V, corresponding to 0~08-43(P.251);

Set 02-29(p.531)=2, and the given range is 0~5V, corresponding to 0~08-43(P.251).

Example: Set 08-00(p.170)= 2X, 02-01(p.501)= 3, 02-20(p.17)= 0, 02-28(p.197)= 0.0%,02-25(p.198)= 4.00,02-26(p.199)=20.00, indicating that the PID target value is given by 4-5 current (4-20mA).

If the value given by user is 8mA, the corresponding ratio given is (8-4)/(20-4) *08-43(P.251)

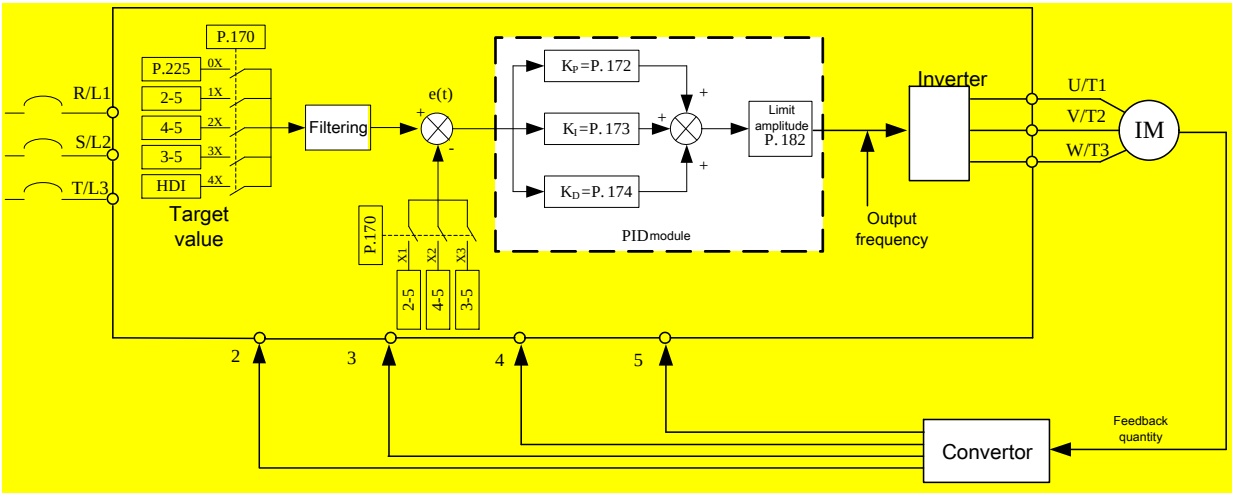

- If the output frequency reaches 01-03(P.3) * 08-14(P.182), the feedback value < the target value * 08-07(P.175), and the duration time exceeds the set value of 08-08(P.176), the PID is considered abnormal and should be processed according to the set value of 08-09(P.177).

  For example, when 08-07(P.175)=60%, 08-08(P.176)=30s, 08-09(P.177)=0, 01-03(P.3)=50Hz, 08-14(P.182)=100%, if the output frequency reaches 50Hz, the feedback value is lower than 60% of the target feedback value and lasts for 30s, an alarm PID will be displayed, and the equipment will stop at this time freely.

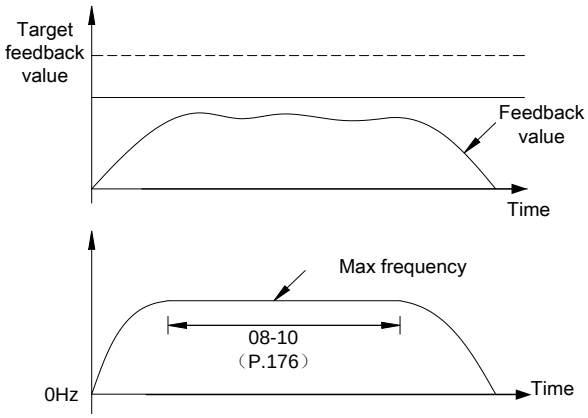

- If the setting value of 08-10(P.178) is 0, the setting values of 08-11(P.179), 08-12(P.180), 08-13(P.181) and 08-15(P.183) are invalid. If the setting value of 08-10(P.178) is not 0, the sleep function of PID will be turned on. If the absolute value of the deviation between the actual feedback value and the target feedback value is less than the sleep detection deviation and lasts for 08-11(P.179) sleep detection time, the inverter will gradually reduce the output frequency at this time. When the output frequency of the inverter is lower than the stop level of 08-13(P.181), the inverter will slow down and stop. When the feedback value is lower than the wake-up level, the output frequency of the inverter will be controlled by PID again.

  For example: 08-10(P.178)=5%, 08-11(P.179)=1.0s, 08-12(P.180)=90%, 08-13(P.181)=40Hz, 08-15(P.183)=0.5Hz. If the actual feedback value is greater than 95% and less than 105% of the target feedback value and is in the stable

zone, the inverter will reduce the output frequency based on 0.5Hz per second in the stable zone. When the output frequency of the inverter is lower than 40Hz, the inverter will directly slow down and stop. If the actual feedback value is lower than 90% of the target feedback value, the inverter will wake up and the output frequency will be controlled by PID again.

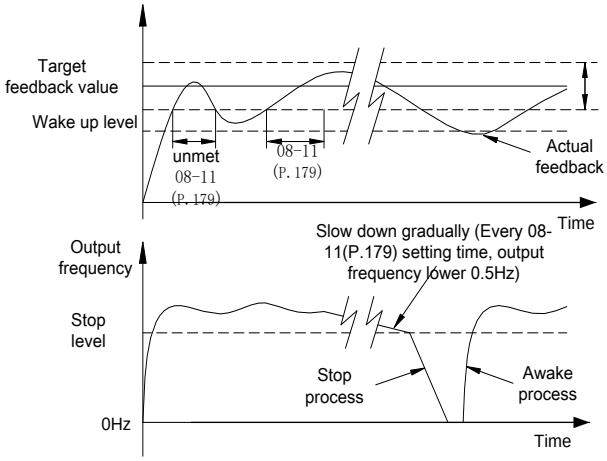

◆ Simple setting of PID gain:

1. When the target frequency changes, if the output response is slow, the proportional gain should be increased; If the output response is fast but unstable, the proportional gain should be reduced (KP=08-04(P.172)).。

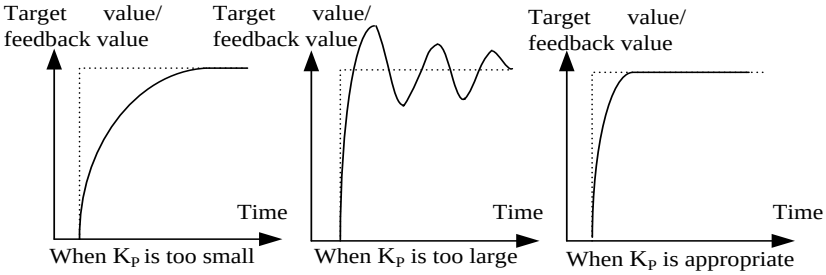

2. If the target frequency and the feedback frequency are not equal, the integral time should be reduced; If the target frequency and the feedback frequency become equal after the unstable oscillation, the integral time should be increased (KI=08-05(P.173)).。

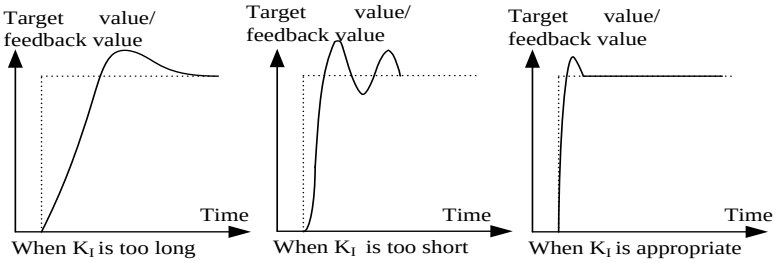

◆ After increasing the proportional gain, if the output response is still slow, the differential gain should be increased. If the output is unstable, the differential gain should be reduced (KD=08-06(P.174)).

Note: 1. When 08-09(P.177)=2, the keypad will display no alarm and the multi-function digital output terminal will detect alarm. This alarm will be released through 00-02=2(P.997=1) reset or power off.

2. When selecting the source of target pressure and feedback pressure, please pay attention to the settings of 08-00(P.170) and 02-00~02-03(P.500~P.504).

5.9.3 PID parameter group 2

Parameter	Name	Default	Setting range	Content
08-20 P.641	Proportional gain P2	20.0%	0.1%~1000.0%	This gain determines the response degree of the proportional controller to the feedback error. The greater the gain, the faster the response, but too much gain will generate oscillation.
08-21 P.642	Integral time I2	1.00s	0~60.00s	This parameter is used to set the integral time of the integral controller. If the integral gain is too large, the integral effect will be too weak to eliminate the steady-state error. If the integral gain is relatively small, the system oscillation times will increase. If the integration gain is too small, the system may be unstable.
08-22 P.643	Differential time D2	0ms	0~10000ms	This gain determines the response degree of the differential controller to the error variation. Appropriate differential time can reduce the overshoot of the proportional controller and the integral controller, so that the oscillation can be quickly attenuated and stabilized. However, if the differential time is too large, it can cause system oscillation.

5.9.4 PID filter setting

- The setting of filtering function can reduce the influence of interference on the system, but will reduce the response performance

Parameter	Name	Default	Setting range	Content
08-24 P.711	PID target filtering time	0.00s	0~650.00s	Set the low-pass filtering time constant of PID target quantity
08-25 P.712	PID feedback filtering time	0.00s	0~60.00s	Set the low-pass filtering time constant of PID feedback quantity
08-26 P.713	PID output filtering time	0.00s	0~60.00s	Set the low-pass filtering time constant of PID output quantity

Setting PID filtering time constant

- 08-24(P.711) is used to set the filtering time constant of PID target quantity, which can effectively reduce the adverse impact of sudden change of PID target quantity on the system.
- 08-25(P.712) is used to set the filtering time constant of PID feedback quantity, which can effectively reduce the influence of interference to the feedback quantity, but will reduce the response performance of the process closed-loop system.
- 08-26(P.713) is used to set the filtering time constant of PID output quantity, which can effectively reduce the sudden change of PID output frequency, but will also reduce the response performance of the process closed-loop system.

5.9.5 PID deviation control limit

- If the deviation between the target quantity and the feedback quantity is less than the setting of 08-27(P.714), the PID output frequency will remain unchanged

Parameter	Name	Default	Setting range	Content
08-27 P.714	PID bias control limit	0.00%	0~100.00%	If the deviation between the target quantity and the feedback quantity is less than the setting of 08-27(P.714), the PID will stop the adjustment operation.

Settin PID deviation limit

- 08-27(P.714) is used to set PID deviation control limit. If the deviation between the target quantity and the feedback quantity is less than the setting of 08-27(P.714), the PID will stop the adjustment operation. When the deviation is relatively small, the PID output frequency will remain unchanged, which is very effective for some closed-loop situations.

5.9.6 PID integral property

- PID integral separation function can effectively reduce overshoot

Parameter	Name	Default	Setting range	Content	
08-28 P.715	Integral separation attribute	0	0	No integral separation	08-28 P.715
			1	Integral separation	
08-29 P.716	Integral separation point	50.00%	0~100.00%	Set the deviation between the target quantity and the feedback quantity when the integral separation function works	

Settin PID integral separation function

- When 08-28(P.715) is set to 1, integral separation is valid. If the deviation between the target quantity and the feedback quantity is greater than the setting of 08-29(P.716), PID will only perform the proportional and differential actions, which is conducive to reducing the overshoot of PID.

5.9.7 PID differential limit

- In PID control, differentiation is easy to cause system oscillation, so the differential action will generally be limited to a very small range

Parameter	Name	Default	Setting range	Content
08-30 P.717	PID differential limit	0.10%	0~100.00%	Set the PID differential limit value

Setting PID differential limit

- In PID control, differentiation is sensitive and easy to cause system oscillation, so the PID differential action will generally be limited to a very small range. 08-30(P.717) is used to set the range of PID differential output.

5.9.8 PID output deviation limit

➢ The setting of PID output deviation limit can control the change of PID output and improve the stability of inverter operation

Parameter	Name	Default	Setting range	Content
08-31 P.718	PID output positive deviation limit	100.00%	0~100.00%	They are used to set the limit of the difference between the two outputs of PID
08-32 P.719	PID output negative deviation limit	100.00%	0~100.00%	

Setting PID output deviation limit

◆ This function is used to limit the difference between two outputs of PID, which can effectively prevent the PID output from changing too fast, so as to stabilize the inverter operation.

5.9.9 PID parameter switchover

➢ If one group of PID parameters cannot meet the requirements of the whole process control, two groups of PID can effectively solve the problem

Parameter	Name	Default	Setting range	Content
08-33 P.720	PID parameter switchover operation selection	0	0	No PID switchover
			1	Switch PID according to deviation
08-34 P.721	PID parameter switchover deviation lower limit	20.00%	0~100.00%	If the deviation is less than 08-34 (P.721), the first group of PID parameters will work. If the deviation is greater than 08-35 (P.722), the second group of PID parameters will work. If the deviation is between the above two, the PID parameters will change linearly.
08-35 P.722	PID parameter switchover deviation upper limit	80.00%	0~100.00%	

Settin PID parameter switchover

◆ In some applications, a group of PID parameters cannot meet the requirements of the whole operation process, so different PID parameters need to be adopted in different situations. Two groups of PID parameters can be automatically switched according to the PID deviation, as shown in the following diagram:

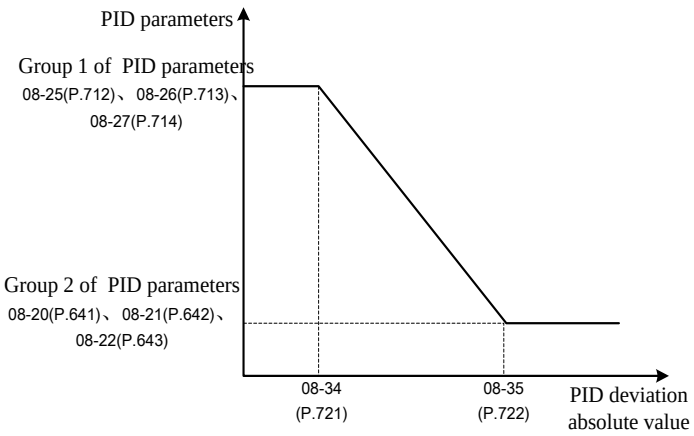

5.9.10 PID malfunction selection

- In case of PID malfunction, 08-39 and 08-40 will give different operating conditions so as to be suitable for different applications

Parameter	Name	Default	Setting range	Content	
08-36 P.723	PID disconnection operation option	1	0 ~ 1	0: When PID disconnection is detected, the inverter will not operate to the upper speed limit and give an alarm 1: When PID disconnection is detected, the inverter will operate to the upper speed limit and then give an alarm	
08-39 P.726	PID shutdown operation action selection	0	0	Shutdown without operation	Set whether PID operation action selection when shutdown
			1	Shutdown with operation	

Setting PID malfunction selection

- 08-36(P.723) is used to select the operation when PID disconnection occurs. In general, when PID disconnection is detected, the inverter will directly alarm.
- 08-39(P.726) is used to select PID operation during shutdown. Generally, PID should stop operation during shutdown.

5.9.11 PID reverse run operation selection

- PID reverse run operation selections used to set whether reverse run is allowed when the PID calculation result is negative

Parameter	Name	Default	Setting range	Content
08-40 P.727	PID allowed reverse rotation action selection	0	0: PID does not allow reverse rotation 1: PID allows reverse rotation	Set whether PID function allows reverse run of inverter
08-41 P.728	PID negative integral limit	0.0%	0 ~ 100.0%	It is used to set the upper limit of PID reverse integral. Set to 0 when reverse run is not allowed.
08-42 P.729	PID minimum output frequency	0.00Hz	0 ~ 10.00Hz	It is used to set the minimum PID output

Setting PID reverse run operation selection

- When PID allows reverse run, 08-41(P.728) should be set to a value greater than 0, which is generally set to 100.0%. If PID does not allow reverse run, 08-41(P.728) will be set to 0.
- 08-42(P.729) is used to set the lowest output frequency of PID calculation. If the output is less than this value, the inverter will not output.

5.9.12 PID pressure range setting

Set the range of PID target and feedback

Parameter	Name	Default	Setting range	Content
08-43 P.251	PID pressure range (Bar) setting	100.0	1.0~100.0	Set the range of PID and feedback.

Setting PID pressure range

◆ For example：If the pressure sensor feedback range is 0~10V, the corresponding pressure is 0~16.0bar, then 08-43(P.251) set 16.0.

5.9.13 PID unit selection

Display PID pressure unit when used with PU301C.

Parameter	Name	Default	Setting range	Content
08-44 P.252	PID unit selection	0	0	%
			1	bar
			2	empty
			3	kgs
			4	kg
			5	psi
			6	Pa
			7	kPa
			8	MPa
			9	C

Setting PID unit selection

◆ For example：if the pressure unit of PU301C shows bar, then 08-44(P.252) is set 1.

5.9.14 PID Analog signal feedback loss

Used to detect the feedback signal disconnection when PID feedback (4~20mA).

Parameter	Name	Default	Setting range	Content
08-45 P.253	Analog signal feedback loss detection time	0.0s	0.0~600.0s	Set the time of feedback disconnect detection, set to 0 to turn off the function.
08-46 P.254	Analog signal feedback loss action selection	0	0	Alarm AErr and inverter stop freely
			1	Slow down to stop then alarm AErr
			2	Alarm AErr and continue operation

Setting PID Analog signal feedback loss

- For example : PID feedback current signal is 4~20mA. If terminal 4-5 is the input source, inverter running feedback signal disconnect, and will slow down to stop after10.0s, to alarm AEr need to set to following parameter : 02-01(P.501) = 4,02-20(P.17) = 0,08-00(P.170)=X2 , 08-45(P.253)=10.0s,08-46(P.254) = 1

5.10 Application parameter group 10

Parameter group	Parameter number	Parameter name	Setting range	Default	Reference page
10-00	P.10	DC brake operating frequency	0~120.00Hz	3.00Hz	225
10-01	P.11	DC brake operating time	0~60.0s	0.5s	225
10-02	P.12	DC brake operating voltage	0 ~ 30.0% : 7.5K/5.5KG and below types	4.0%	225
			0 ~ 30.0% : 11K/7.5KG ~ 55K/45KG types	2.0%	
			0 ~ 30.0% : 75K/55KG and above types	1.0%	
10-03	P.151	Zero-speed control function selection	0: No output at zero-speed	0	226
			1: Perform DC voltage brake at VF control (00-21(P.300)/00-22(P.370)=0)		
10-04	P.152	Voltage at zero-speed control	0 ~ 30.0% : 7.5K/5.5KG and below types	4.0%	226
			0 ~ 30.0% : 11K/7.5KG ~ 55K/45KG types	2.0%	
			0 ~ 30.0% : 75K/55KG and above types	1.0%	
10-05	P.242	Start DC brake function	0: No DC brake before start function	0	227
			1: Having DC brake before start function		
10-06	P.243	Start DC brake time	0~60.0s	0.5s	227
10-07	P.244	Start DC brake voltage	0 ~ 30.0%: 7.5K/5.5KG (inclusive) and below types	4.0%	227
			0 ~ 30.0%: 11K/7.5KG ~ 55K/45KG types	2.0%	
			0 ~ 30.0%: 75K/55KG (inclusive) and above types	1.0%	
10-08	P.150	Start mode selection	XX0: No frequency search	0	228
			XX1: Direct frequency search		
			XX2: Voltage reduction mode		
			X0X: Power on once		
			X1X: Every start		
			X2X: Sudden stop and restart only		
			0XX: No rotation direction detection		
			1XX: Rotation direction detection		
			2XX: 00-15(P.78) =0, Rotation direction detection; 00-15(P.78)=1/2, No rotation direction detection		
10-09	P.57	Restart idling time	0~30.0s	99999	228
			99999: No restart function		
10-10	P.58	Restart rising time	0 ~ 60.0s: 7.5K/5.5KG (inclusive) and below types	5.0s	228
			0 ~ 60.0s: 11K/7.5KG ~ 55K/45KG types	10.0s	
			0 ~ 60.0s: 75K/55KG (inclusive) and above types	20.0s	
10-11	P.61	Remote control function	X0: No remote control function	0	230
			X1: Remote control function, memorable frequency		
			X2: Remote control function, unmemorable frequency		
			X3: Remote control function, unmemorable frequency, STF/STR “turn off” will clear remote control set frequency		
			X4 : Remote control function, frequency save in memory every 5s		
			1X : Frequency command range 01-01(P.2)~01-00(P.1), frequency command value from RH,RM setting		

Application parameter group 10

Parameter group	Parameter number	Parameter name	Setting range	Default	Reference page
10-12	P.65	Retry function selection	0: No retry function 1: Overvoltage occurring, the inverter performs retry function 2: Overcurrent occurring, the inverter performs retry function 3: Overvoltage or overcurrent occurring, the inverter performs retry function 4: All alarms have retry function	0	233
10-13	P.67	Reset times at abnormal	0: No retry function 1~10: If the continuous alarm exceeds the set value of 10-13 (P.67), the inverter will no longer perform the retry function	0	233
10-14	P.68	Reset execution waiting time	0~360.0s	1.0s	233
10-15	P.69	Alarm reset cumulative times	Read only	0	233
10-16	P.119	The dead time of positive and reverse rotation	0~3000.0s	0.0s	234
10-17	P.159	Energy saving control	0: Normal operation mode 1: Energy-saving operation mode	0	234
10-18	P.229	Dwell function selection	0: No function 1: Backlash compensation function 2: Acceleration and deceleration interrupt waiting function	0	235
10-19	P.230	Dwell frequency at acceleration	0~650.00Hz	1.00Hz	235
10-20	P.231	Dwell time at acceleration	0~360.0s	0.5s	235
10-21	P.232	Dwell frequency at deceleration	0~650.00Hz	1.00Hz	235
10-22	P.233	Dwell time at deceleration	0~360.0s	0.5s	235
10-23	P.234	(Triangular wave function selection)	0: No function 1: Connecting the external TRI signal, the triangular wave function is valid 2: The triangular wave function is valid at any time	0	237
10-24	P.235	Maximum amplitude	0~25.0%	10.0%	237
10-25	P.236	Amplitude compensation at deceleration	0~50.0%	10.0%	237
10-26	P.237	Amplitude compensation during acceleration	0~50.0%	10.0%	237
10-27	P.238	Amplitude acceleration time	0~360.00s/0~3600.0s	10.00s	237
10-28	P.239	Amplitude deceleration time	0~360.00s/0~3600.0s	10.00s	237
10-29	P.247	MC switchover interlock time	0.1~100.0s	1.0s	238
10-30	P.248	Start waiting time	0.1~100.0s	0.5s	238
10-31	P.249	Frequency conversion-power frequency switching frequency	0~60.00Hz 99999: No automatic switching sequence	99999	238
10-32	P.250	Automatic switching operation range	0~10.00Hz: After switching from inverter operation to power frequency operation, the inverter start command (STF/STR) will be turned OFF and then switch to inverter operation 99999: After switching from inverter operation to power frequency operation, the inverter start command (STF/STR) will be turned OFF and then switch to inverter operation, and slow down to stop.	99999	238

Parameter group	Parameter number	Parameter name	Setting range	Default	Reference page
10-33	P.273	Power-off stop mode selection	0: No deceleration and stop function at power-off 1: No insufficient voltage avoidance (when power failure due to insufficient voltage, the inverter will slow down and stop) 2: No insufficient voltage avoidance (when power failure due to insufficient voltage, the inverter will slow down and stop. Restore reacceleration during power-off deceleration) 11: There is insufficient voltage avoidance (when power failure due to insufficient voltage, the inverter will slow down and stop) 12: There is insufficient voltage avoidance (when power failure due to insufficient voltage, the inverter will slow down and stop. Restore reacceleration during power-off deceleration)	0	241
10-34	P.274	Subtract the frequency at the beginning of deceleration	0~20.00Hz	3.00Hz	241
10-35	P.275	Deceleration processing of start frequency	0~120.00Hz: If the output frequency is≥10-35 (P.275), the deceleration starts from the output frequency-10-34 (P.274); If the output frequency is<10-35 (P.275), the deceleration starts from the output frequency 99999: The deceleration starts from the output frequency-10-34 (P.274)	50.00Hz	241
10-36	P.276	Deceleration time during power failure 1	0~360.00s/0~3600.0s	5.00s	241
10-37	P.277	Deceleration time during power failure 2	0~360.00s//0~3600.0s: Set the deceleration time below the set frequency of 10-38 (P.278) 99999: Set the deceleration time to the set frequency of 10-38 (P.278)	99999	241
10-38	P.278	Deceleration time during power failure switchover frequency	0~650.00Hz	50.00Hz	241
10-39	P.279	UV avoidance voltage gain	0~200.0%	100.0%	241
10-40	P.700	VF separated voltage source	0: Number given 10-41 (P.701) 1: Analog quantity given or HDI pulse given	0	243
10-41	P.701	VF separated voltage value	50Hz/60Hz system setting: 0~440.00V	By voltage	243
10-42	P.702	VF separated voltage acceleration time	0~1000.0s	0.0s	243
10-43	P.703	VF separated voltage deceleration time	0~1000.0s	0.0s	243
10-44	P.704	VF separated shutdown mode selection	0: Frequency/voltage independently reduced to 0 1: Reduce the voltage to zero and then reduce the frequency	0	243
10-45	P.267	Regeneration avoidance operation selection	0: No regeneration and avoidance function 1: The regeneration and avoidance function is valid during operation (automatic mode, automatic calculation of acceleration and deceleration during operation) 2: Regenerative avoidance is valid only at constant speed (automatic mode, automatic calculation of acceleration and deceleration during action) 11: The regeneration and avoidance function is valid during operation (manual mode, acceleration and deceleration are set by 10-49 (P.271) and 10-50 (P.272) during operation) 12: Regenerative avoidance is valid only at constant speed (manual mode, acceleration and deceleration are set by 10-49 (P.271) and 10-50 (P.272) during operation)	0	244

Application parameter group 10

Parameter group	Parameter number	Parameter name	Setting range	Default	Reference page
10-46	P.268	Regeneration avoidance operation voltage level	310~800V: 440V type	760V	244
10-47	P.269	DC bus voltage detection sensitivity at deceleration	0: Prevent regeneration avoidance from invalidation according to bus voltage change rate 1~5: Set detection sensitivity of bus voltage change rate, the larger the number, the higher the sensitivity.	0	244
10-48	P.270	Regeneration avoidance frequency compensation value	0~10.00Hz: Set the limit of regenerative avoidance frequency compensation 99999: No frequency limit	6.00Hz	244
10-49	P.271	Regeneration avoidance voltage gain coefficient	0~400.0%/0~40.00%(	100.0%	244
10-50	P.272	Regeneration avoidance frequency gain coefficient	0~400.0%/0~40.00%	100.0%	244
10-51	P.264	Over-excitation deceleration selection	0: No over-excitation deceleration function 1: Having over-excitation deceleration function	0	245
10-52	P.265	Over-excitation current level	0~200.0%	150.0%	245
10-53	P.266	Over-excitation gain	1.00~1.40	1.10	245
10-54	P.362	Short-circuit brake time at PM motor start	0~60.0s	0.0s	245
10-55	P.780	PLC operation selection	0: PLC function invalid 1: PLC function is valid, PLC RUN signal comes from external terminal input signal or 10-56 (P.781). 2: PLC function is valid, PLC RUN signal comes from external terminal input signal.	0	246
10-56	P.781	PLC operation	0: No influence. 1: PLC RUN	0	246
10-57	P.782	PLC erasure	0: Invalid 1: Erase PLC program, the parameter value will be 0 after successful erasing.	0	246
10-58	P.783	PLC component monitoring selection	0~326	0	246
10-59	P.784	PLC component monitoring value	Read only	Read only	246

5.10.1 DC braking

➢ When the motor stops, apply DC voltage the motor to make the motor shaft do not rotate, which can adjust the motor stop time and braking torque.

Parameter	Name	Default	Setting range	Content
10-00 P.10	DC brake operating frequency	3.00Hz	0~120.00Hz	---
10-01 P.11	DC brake operating time	0.5s	0~60.0s	---
10-02 P.12	DC brake operating voltage	4.0%	0~30.0%	7.5K/5.5KG and below types
		2.0%		11K/7.5KG ~ 55K/45KG types
		1.0%		75K/55KG and above types

Setting DC braking

- After inputting the stop signal (please refer to chapter 4 for basic operation of starting and stopping the motor), the output frequency of the inverter will gradually decrease. When the output frequency decreases to "DC brake operation frequency (10-00(P.10))", DC braking will start to operate.
- During DC braking, the inverter will inject DC voltage into the motor coil to lock the rotor of the motor. This voltage is called "DC braking voltage (10-02(P.12))". The larger the set value of 10-02(P.12), the greater the DC braking voltage, and the better the braking capability. However, the final output braking current will not exceed the rated current of the inverter.
- The operation of DC braking will be maintained for a period of time (set value of 10-01(P.11)), in order to overcome the inertia of motor rotation.
- The details are shown in the following diagram:

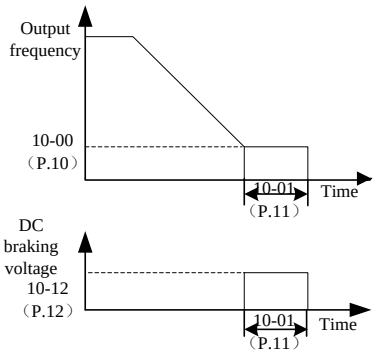

Note: 1. The user must set appropriate values to obtain the best control feature.

2. If any one of 10-00(P.10), 10-01(P.11) and 10-02(P.12) is set to "0", DC braking will not operate, that is, when it stops, the motor will run freely for a period of time.

5.10.2 Zero-speed/zero-servo control

➢ Zero-speed/zero-servo function selection

Parameter	Name	Default	Setting range	Content
10-03 P.151	Zero-speed control function selection	0	0	No output at zero-speed
			1	Perform DC voltage brake at VF control (00-21(P.300)/ 00-22(P.370)=0)
10-04 P.152	Voltage at zero-speed control	4.0%	0~30.0%	7.5K/5.5KG and below types
		2.0%		11K/7.5KG ~ 55K/45KG types
		1.0%		75K/55KG and above types

Setting Zero-speed control

◆ When applying this function, please be sure to set 01-11(P.13) (starting frequency) to 0.

Note: 1. Assuming 10-04(P.152)=6%, the output voltage at zero speed is 6% of the base voltage 01-04(P.19).

2. For setting the V/F control mode, please refer to the motor control mode parameters 00-21(P.300) and 00-22(P.370).

5.10.3 DC brake before start

- During operation, the motor may be in a rotating state due to external force or inertia. In this case, if the driver is suddenly put into operation, the output current may be too large, causing motor damage or driver protection.

Parameter	Name	Default	Setting range	Content
10-05 P.242	Start DC brake function section	0	0	No DC brake function before starting
			1	It has DC brake function before starting
10-06 P.243	Start DC brake time	0.5s	0~60.0s	---
10-07 P.244	Start DC brake voltage	4.0%	0~30.0%	7.5K/5.5KG (inclusive) and below types
		2.0%		11K/7.5KG ~ 55K/45KG types
		1.0%		75K/55KG (inclusive) and above types

Setting DC brake before start

- If 10-05(P.242)=0, there will be no DC braking function selection before start. If 10-05(P.242)=1 and the DC braking function is selected before starting, the inverter, when starting, will inject DC voltage (set value of 10-07(P.244)) into the motor coil to lock the rotor of the motor. The DC braking operation will be maintained for a period of time (the set value of 10-06(P.243)) before the motor starts to run.

  The details are shown in the following diagram:

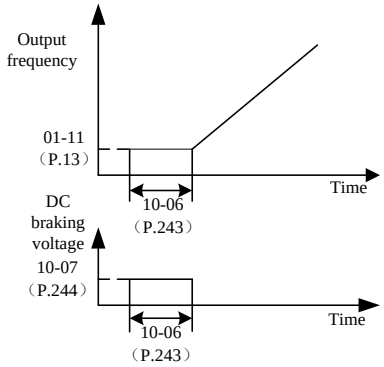

Note: This function is only valid in V/F mode (i.e. 00-21(P.300)=0).

5.10.4 Start mode selection

➢ The most suitable start mode can be selected according to different load conditions.

Parameter	Name	Default	Setting range	Content
10-08 P.150	Start mode selection	0	xx0	No frequency search
			xx1	Direct frequency search
			xx2	Voltage reduction mode
			x0x	Power on once
			x1x	Every start
			x2x	Sudden stop and restart only
			0xx	No rotation direction detection
			1xx	Rotation direction detection
			2xx	00-15 (P.78)=0, Rotation direction detection
				00-15 (P.78)=1/2, No rotation direction detection
10-09 P.57	Restart idling time	99999	0~30.0s	---
			99999	No restart function
10-10 P.58	Restart rising time	5.0s	0~60.0s	7.5K/5.5KG (inclusive) and below types
		10.0s		11K/7.5KG ~ 55K/45KG types
		20.0s		75K/55KG (inclusive) and above types

Setting Start mode selection

◆ 10-08(P.150) is set by bit, with a total of 4 bits. The meaning of each bit is as follows:

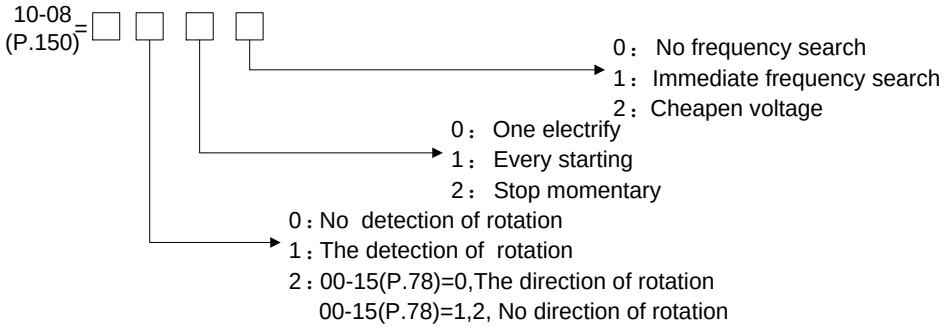

Note: 1. 10-08(P.150) must also be set if the function of instant restart is needed.
2. If 10-08(P.150) is not 0, it defaults to linear acceleration and deceleration.
3. The direction detection bit of 10-08(P.150) is only valid for direct frequency search.
4. This function is only valid in V/F mode (i.e. 00-21(P.300)=0).

Setting Restart

◆ During the motor operation, the inverter will stop the voltage output immediately at instantaneous power interruption. If 10-09(P.57)=99999, the inverter will not restart automatically after power is restored; If 10-09(P.57)=0.1~30, when the power is restored, the inverter will automatically restart the motor after the motor idles for a period of time (the set value of 10-09(P.57)).

◆ When starting the motor automatically, the output frequency is the target frequency, but the output voltage is zero and then slowly rises to the proper voltage value. This voltage rise time is called “restart voltage rise time (10-10(P.58))”.

◆ No frequency search restart operation

The restart operation has nothing to do with the free running speed of the motor, but is still a voltage reduction

method of slowly increasing the voltage according to the target frequency before the instantaneous stop.

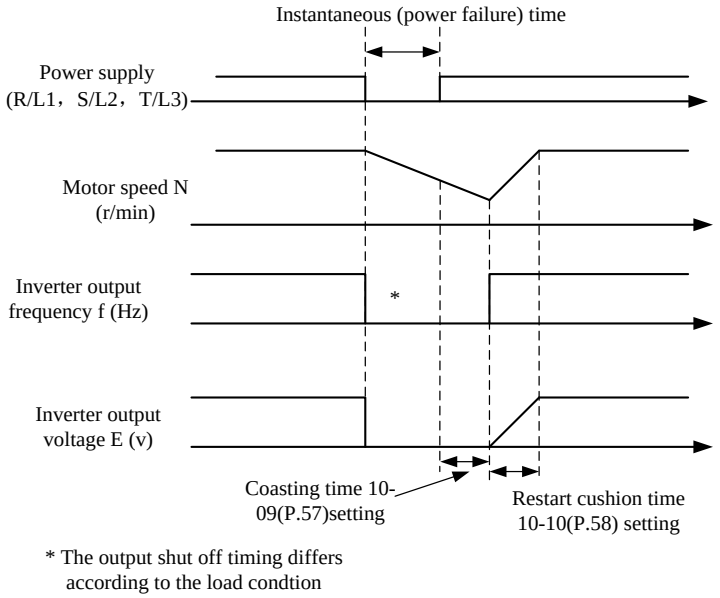

◆ Frequency search restart operation

When restarting, offline automatic tuning is needed.

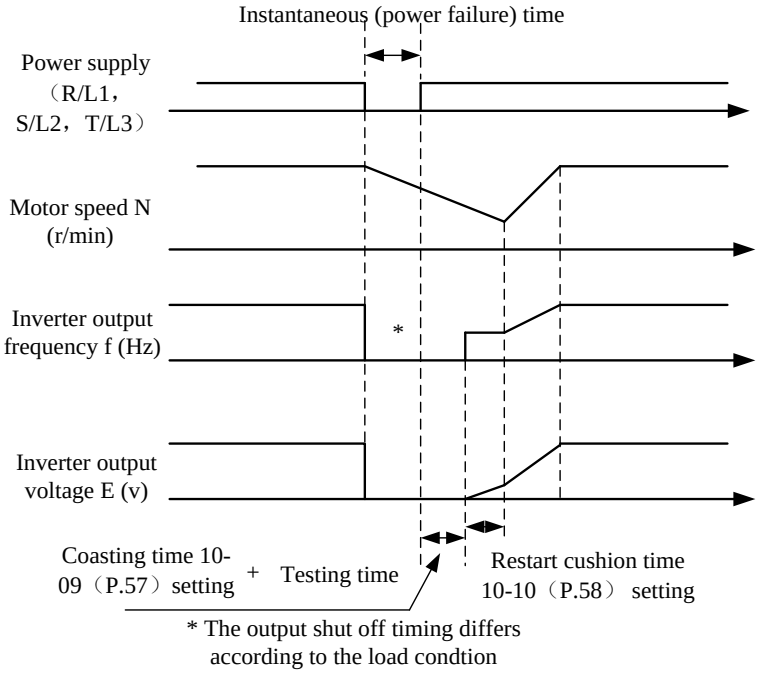

5.10.5 Remote setting control function

➢ If operation box is located away from control cabinet, without analog signal, variable speed can still be realized through digital input.

Parameter	Name	Default	Setting range	Content
10-11 P.61	Remote control function	0	X0	No remote control function
			X1	Remote control function, memorable frequency
			X2	Remote control function, unmemorable frequency
			X3	Remote control function, unmemorable frequency, STF/STR "turn off" will clear remote control set frequency
			X4	Remote control function, frequency save in memory every 5s.
			1X	Frequency command range 01-01~01-00(P.2~P.1), frequency command value from RH,RM setting.

Setting Remote setting control function

◆ In the case of the external mode, the mixed mode 1, and the mixed mode 5, when the operation cabinet and the control cabinet are far apart, even if analog signals are not used, variable speed operation can be carried out through contact signals.

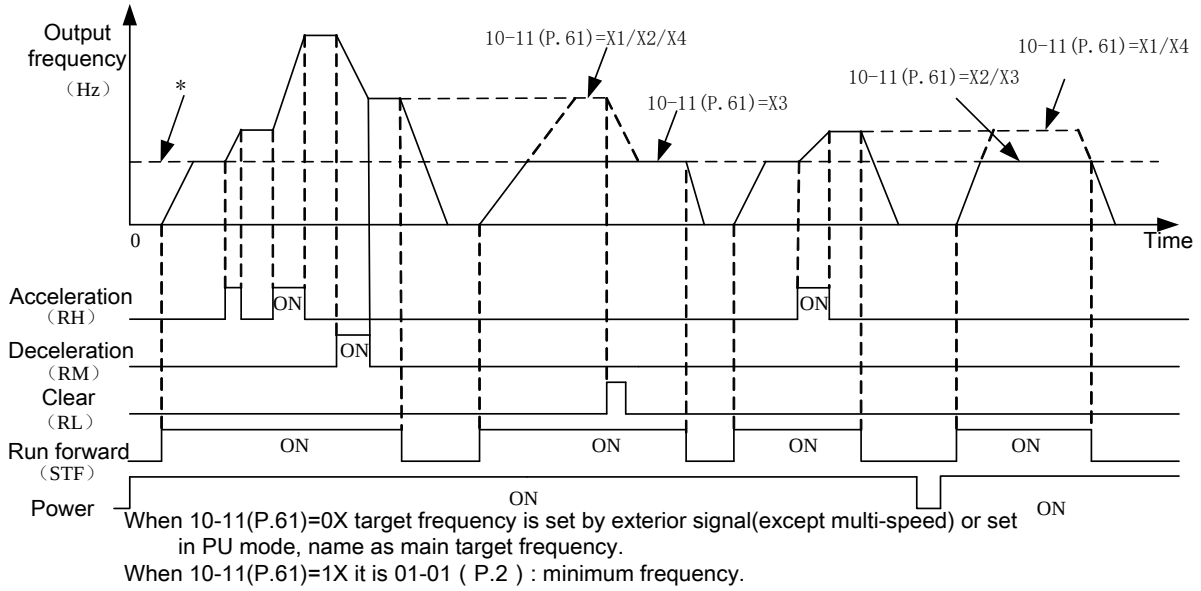

◆ Remote setting function

1. 10-11(P.61) decides remote function and ways to save frequency.

2.Set 10-11(P.61) = X1~X4(remote control function on) , terminal RM, RH, RL will be accelerate (RH), decelerate (RM) and clear (RH).See following figure:

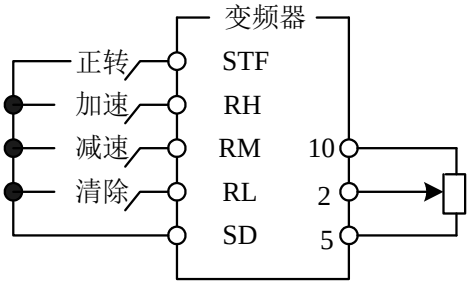

2. If 10-11 (P.61)=1~4, the target frequency of inverter = (frequency set during RH and RM operation + external set frequency other than multi-speed/PU set frequency);

If 10-11 (P.61)=11~14, the target frequency of inverter = frequency set during RH and RM operation.

◆ Frequency save

The frequency save function is to store the remote function frequency (the frequency set by RH, RM operation) in the memory (EEPROM), once the power is turned off then restart, inverter will run to frequency save value (10-11(P.61) = X1/X4).

< Frequency save memory condition >

10-11(P.61) = X1

1. The frequency when start signal (STF/STR) is “off”.
2. When RH (acceleration) and RM (deceleration) are both”off”, the remote control setting frequency is stored every 1 miunte (If RL is triggered will not write).

10-11(P.61) = X4

1. When RH (acceleration) and RM (deceleration) signals are both”off”;
2. Store the remote control setting frequency once every 5s (If RL is triggered will not write);

◆ Remote control setting function

3. 10-11(P.61) selects having/no remote control setting function and having/no frequency setting memory function during remote control setting.

   When setting 10-11(P.61)=1~3 (remote control setting function is valid), the functions of RH, RM and RL signals are acceleration (RH), deceleration (RM) and clearing (RL) in sequence. As shown in the following diagram:

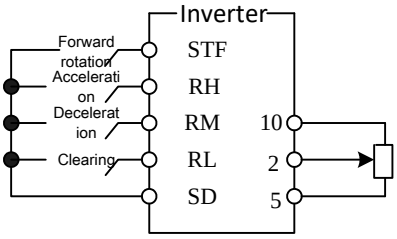

4. When applying the remote control function, the output frequency of the inverter= (RH and RM operation set frequency + external set frequency other than multi-speed /PU set frequency).

◆ Frequency set value memory

The frequency set value memory function will store the remote control set frequency (RH and RM operation set frequency) into the memory (EEPROM). Once the power supply is cut off, the output frequency at the time of reconnection can be restarted by the set value (10-11(P.61)=1).

< Condition for frequency setting value memory >

3. The frequency when the start signal (STF/STR) is “off”.
4. When the RH (acceleration) and RM (deceleration) signals are simultaneously “off” (or “on”), the remote control set frequency will be stored once every 1 minute. (Compare the current frequency set value with the past frequency set value every minute, and write it into the memory if there is any difference. However, no writing is performed when the RL signal is valid.)

Note：1. When 10-11(P.61) = 0X, frequency can be controlled by RH (accelerate), RM (decelerate) between 0 and (maximum frequency –frequency set by main speed). Output frequency is limited by 01-00(P.1).

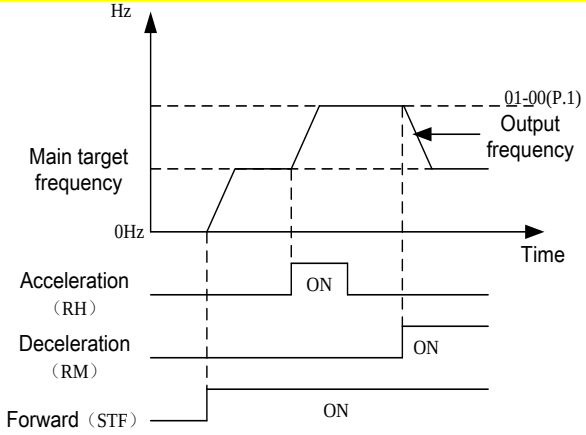

2.When 10-11(P.61) = 1X, the adjustable frequency range through RH (acceleration), RM (deceleration) is 01-01(P.2)~01-00(P.1), and output frequency is limited by 01-00(P.1).

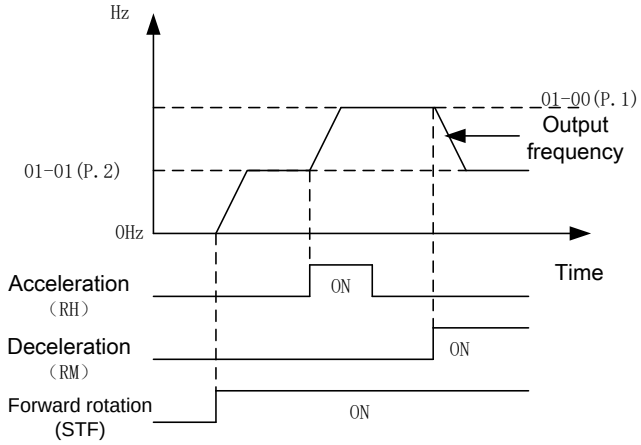

3. RH (acceleration) and RM (deceleration) is “on”, remote frequency acc/dec time is set by 01-40(P.219).
4. If start signal (STF/STR) is "off" but RH (accelerate) or RM (decelerate) is “on”, target frequency will still change.
5. When the start signal (STF/STR) changes from "on" to "off", if the frequency changes from the RH and RM signals are frequently required, please turn off frequency save function (10-11 (P.61))=X2/X3). If it’s turn on (10-11(P.61)=X1/X4), the lifespan of the EEPROM will be shortened due to frequent writing.
6. RH, RM and RL mentioned in this paragraph are the functional names of “multi-function digital input terminals”. If the terminal assignment is changed, other functions may be affected. Please confirm the function of each terminal before modifying the function selection and usage of the multi-function digital input terminal. For details, please refer to 03-00~03-09(P.80~P.84、P.86、P.126~P.128、P.550). And please refer to section 3.5 for relevant wiring.

5.10.6 Retry selection

➢ The retry function is the function of the inverter itself automatically reset and restart when the alarm occurs, which can be selected as the alarm content of the retry object.

Parameter	Name	Default	Setting range	Content
10-12 P.65	Retry function selection	0	0	No retry function
			1	Overvoltage occurring, the inverter performs retry function
			2	Overcurrent occurring, the inverter performs retry function
			3	Overvoltage or overcurrent occurring, the inverter performs retry function
			4	All alarms have retry function
10-13 P.67	Reset times at abnormal	0	0	No retry function
			1~10	If the continuous alarm exceeds the set value of 10-13 (P.67), the inverter will no longer perform the retry function
10-14 P.68	Reset execution waiting time	1.0s	0~360.0s	---
10-15 P.69	Alarm reset cumulative times	0	Read only	---

Settin Retry selection

- After the alarm occurring, the inverter returns to the state before the alarm, which is called “retry”.
- The retry of the inverter is conditional. If the alarm occurs and the inverter automatically retries, but the alarm occurs again within the time (10-14(P.68)*5), then this type of alarm is called “continuous alarm”. If the continuous alarm exceeds a certain number of times, it means that there is a major fault, and this number is called “retry number (10-13(P.67)) at abnormality occurs". At this time, the inverter will no longer perform the retry function, and manual troubleshooting must be carried out.
- If all alarms do not belong to “continuous alarm”, the inverter can perform retry for an unlimited number of times.
- The time between the occurrence of alarm and the execution of retry by the inverter is called “retry execution waiting time”.
- For each retry of alarm, the value of 10-15(P.69) will be automatically added by 1. Therefore, the 10-15(P.69) value read from the memory represents the number of alarm retry.
- If writing parameter 10-15(P.69)=0, alarm retry times can be cleared.

Note: After the retry waiting time of the 10-14(P.68) parameter, the inverter will begin to perform the retry operation. Therefore, when this function is selected for application, it may cause danger to the keypad, so please be very careful of that.

5.10.7 The dead time of positive and reverse rotation

➢ During the process of positive-reverse transition of the inverter, set the transition time at the output 0Hz.

Parameter	Name	Default	Setting range	Content
10-16 P.119	The dead time of positive and reverse rotation	0.0s	0	No such function
			0.1~3000.0s	During positive and reverse switching, waiting and holding time after inverter output frequency drops to zero

Setting The dead time of positive and reverse rotation

◆ The dead time of positive and reverse rotation refers to the waiting and holding time of the inverter. During this period of time, the running inverter will transit from the current run direction to the reverse run direction upon receiving a reverse run command, and its output frequency will drop to zero.

As shown in the following diagram:

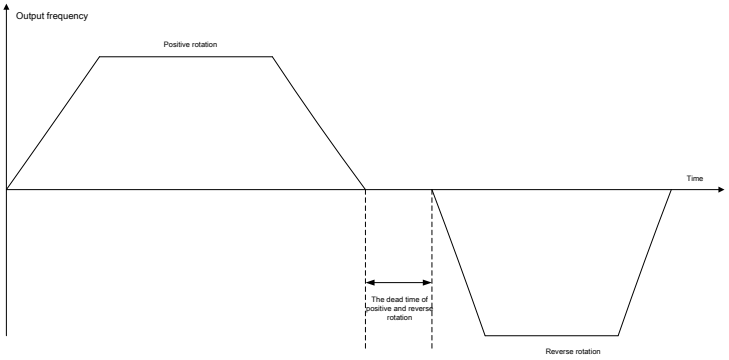

5.10.8 Energy-saving control function V/F

➢ In the energy-saving operation mode, in order to minimize the output power of the inverter in constant speed operation, the inverter will automatically control the output voltage.

Parameter	Name	Default	Setting range	Content
10-17 P.159	Energy saving mode	0	0	Normal operation mode
			1	Energy-saving operation mode

Setting Energy saving mode

◆ In the energy-saving operation mode, in order to minimize the output power of the inverter in constant speed operation, the inverter will automatically control the output voltage.

Note: 1. This function is only valid in V/F mode (00-21(P.300)=”0”).
2. If selecting the energy-saving operation mode, the deceleration time may be longer than the set value. In addition, since overvoltage abnormality will easily occur compared with the constant torque load feature, please set the deceleration time to be relatively longer.
3. For heavy-duty applications or frequent acceleration and deceleration machines, the energy saving effect may not be very good.

5.10.9 Dwell function V/F

- During the process of acceleration/deceleration, this function can solve the problem caused by the interruption of the acceleration/deceleration backlash through the frequency and time set by the parameters.

Parameter	Name	Default	Setting range	Content
10-18 P.229	Dwell function selection	0	0	No function
			1	Backlash compensation function
			2	Acceleration and deceleration interrupt waiting function
10-19 P.230	Dwell frequency at acceleration	1.00Hz	0~650.00Hz	Set the interrupt frequency and time of Dwell function.
10-20 P.231	Dwell time at acceleration	0.5s	0~360.0s	
10-21 P.232	Dwell frequency at deceleration	1.00Hz	0~650.00Hz	Set the interrupt frequency and time of Dwell function.
10-22 P.233	Dwell time at deceleration	0.5s	0~360.0s	

Setting Dwell function

- Backlash compensation (10-18(P.229)="1")

The gears of the decelerator have meshing backlash, and there is no-load segment between positive and reverse rotation, which is called backlash. Even if the motor is running, the backlash will not produce a mechanical following status.
Specifically, when switching the rotation direction and changing from constant speed run to deceleration run, the motor shaft will generate excessive torque, and the current of the motor will rapidly increase or change to regeneration status.
In order to avoid backlash, acceleration and deceleration will be temporarily interrupted. The frequency and time for interrupting acceleration and deceleration are set from 10-18(P.229)~10-22(P.233).

As shown in the following diagram:

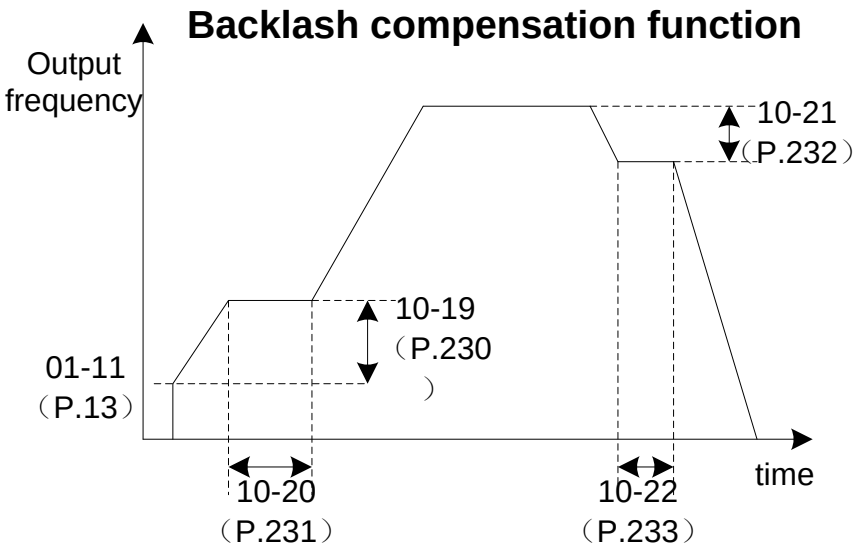

Note: After setting backlash compensation, only the interruption time in acceleration and deceleration time will become longer.

◆ Acceleration and deceleration interrupt waiting function (10-18(P.229)="2")

If 10-18(P.229)="2", the acceleration/deceleration interrupt waiting function is enabled. When accelerating to the frequency set in 10-19(P.230), accelerate to the target value after waiting for the time set in 10-20(P.231). When decelerating to the frequency set in 10-21(P.232), decelerate to the target value after waiting for the time set in 10-22(P.233).

As shown in the following diagram:

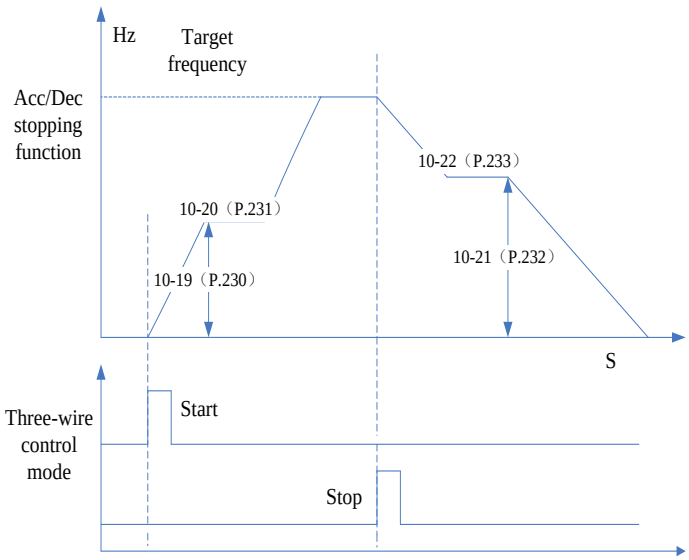

Note: After setting backlash compensation, only the interruption time in acceleration and deceleration time will become longer.

5.10.10 Triangular wave function V/F

➢ According to a certain period, this function makes the frequency generate amplitude through triangular wave operation.

Parameter	Name	Default	Setting range	Content
10-23 P.234	Triangular wave function selection (swing frequency function)	0	0	No function
			1	Connecting the external TRI signal, the triangular wave function is valid
			2	The triangular wave function is valid at any time
10-24 P.235	Maximum amplitude	10.0%	0~25.0%	---
10-25 P.236	Amplitude compensation at deceleration	10.0%	0~50.0%	---
10-26 P.237	Amplitude compensation during acceleration	10.0%	0~50.0%	---
10-27 P.238	Amplitude acceleration time	10.00s	0~360.00s/ 0~3600.0s	When 01-08(P.21)=0, the increment of 10-27 (P.238) and 10-28 (P.239) is 0.01s.
10-28 P.239	Amplitude deceleration time	10.00s	0~360.00s/ 0~3600.0s	When 01-08(P.21)=1, the increment of 10-27 (P.238) and 10-28 (P.239) is 0.1s.

Settin Triangular wave function

◆ In the case of 10-23(P.234) “triangular wave function selection” =”1”, the triangular wave function will be valid when the triangular wave operation signal (TRI) is switched on. Please set any parameter of the 03-00~03-09(P.80~P.84、P.86、P.126~P.128、P.550) “input terminal function selection” as “36”, and then assign TRI signals to the digital input terminal.

◆ In the case of 10-23(P.234) “triangular wave function selection” =”2”, The triangular wave function will be valid at any time.

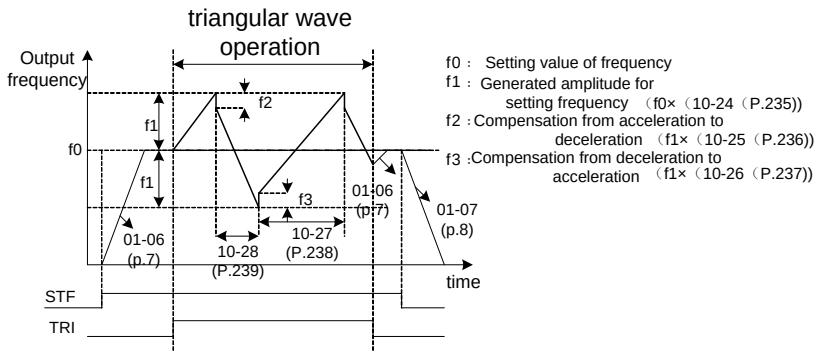

Note: 1. The output frequency is limited by the upper and lower frequency limits in triangular wave operation.

2. If the values of amplitude compensation 10-25(P.236) and 10-26(P.237) are too large, the overvoltage trip and stall prevention operation will automatically run, thus it cannot be operated in the set mode.

3. This function is only valid in V/F mode (i.e. 00-21(P.300)=0).

5.10.11 Power frequency operation function

➢ Inverter has built-in switching control function for power frequency operation-inverter operation. Therefore, the interlocking operation of the magnetic contactor for switching can be conveniently performed only by inputting the start, stop and automatic switching selection signal.

Parameter	Name	Default	Setting range	Content
10-29 P.247	MC switchover interlock time	1.0s	0.1~100.0s	---
10-30 P.248	Start waiting time	0.5s	0.1~100.0s	---
10-31 P.249	Frequency conversion-power frequency switching frequency	99999	0~60.00Hz	---
			99999	No automatic switching sequence
10-32 P.250	Automatic switching operation range	99999	0~10.00Hz	After switching from inverter operation to power frequency operation, the inverter start command (STF/STR) will be set to OFF and then switch to inverter operation
			99999	After switching from inverter operation to power frequency operation, the inverter start command (STF/STR) will be set to OFF and then switch to inverter operation, and slow down to stop.

Setting Power frequency operation function

◆ 10-31(P.249) sets the frequency for switching from inverter operation to power frequency operation. From start-up to 10-31(P.249) inverter operation, the output frequency is above the value of 10-31(P.249), automatically switching to power frequency operation. 10-31(P.249) is set to 99999, without automatic switching.

◆ If 10-32(P.250)≠99999, the (10-31≠99999) will be valid at automatic switching operation. After switching from inverter operation to power frequency operation, if the frequency command is lower than (10-31(P.249)~10-32(P.250)), it will automatically switch to inverter operation and operate at the frequency of the frequency command. If the inverter start command (STF/STR) is set to OFF, the inverter operation will also be switched to.

◆ If 10-32(P.250)=99999, the (10-31(P.249)≠99999) will be valid at automatic switching operation. After switching from inverter operation to power frequency operation, the inverter start command (STF/STR) will be set to OFF and then switch to inverter operation, and slow down to stop.

◆ Examples of power frequency switching function.

1. Set 03-03(P.80)=37, 03-04(P.81)=38, 03-10(P.40)=10, 03-12(P.129)=9. The wiring is as shown in the diagram.

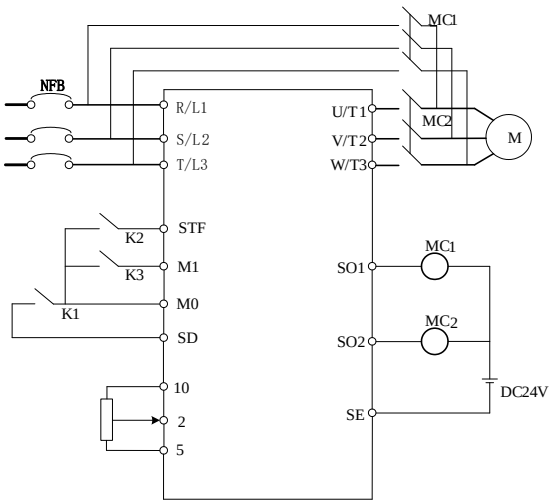

Please note the capacity of the output terminal and the terminals used are different according to the settings of 03-10(P.40), 03-11(P.85), 03-12(P.129) and 03-13(P.130) (output terminal function selection). If selecting output terminal function 10, connect the relay driving the power frequency, and if selecting output terminal function 9, then connect the relay driving frequency conversion. If selecting digital input terminal function 37, choose the power frequency operation switching function; and if selecting digital input terminal function 38, choose the manual power frequency conversion switching signal CS.

Warning:

1. MC1 and MC2 must be mechanically interlocked, and the operation direction of power frequency conversion must be consistent.
2. Apply power frequency operation switching function in external operation mode.
3. STF/STR will be valid when CS signal is set to ON.

◆ The sequence diagrams of several typical power frequency switching operation are as follows:

1. Operation sequence of non-automatic switching sequence (10-31(P.249)=99999)

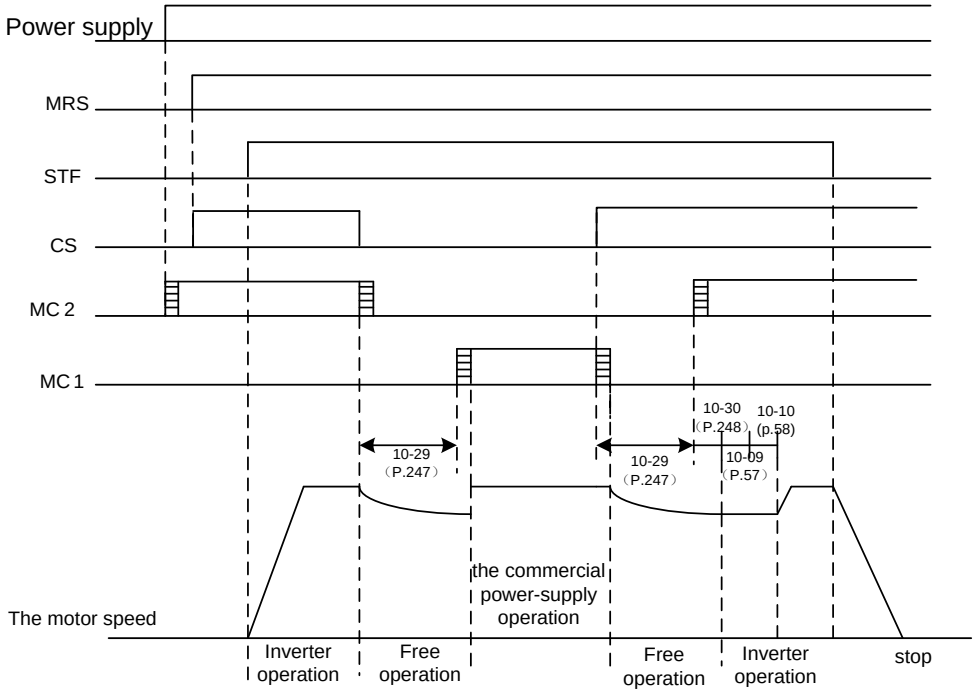

2. Operation sequence with automatic switching sequence (10-31(P.249)≠99999 and 10-32(P.250)=99999)

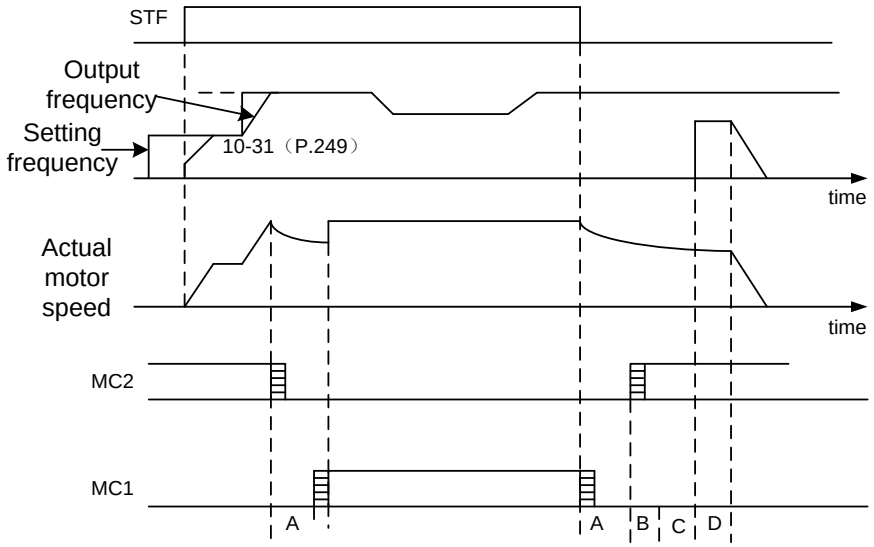

3. Operation sequence with automatic switching sequence (10-31(P.249)≠99999 and 10-32(P.250)≠99999)

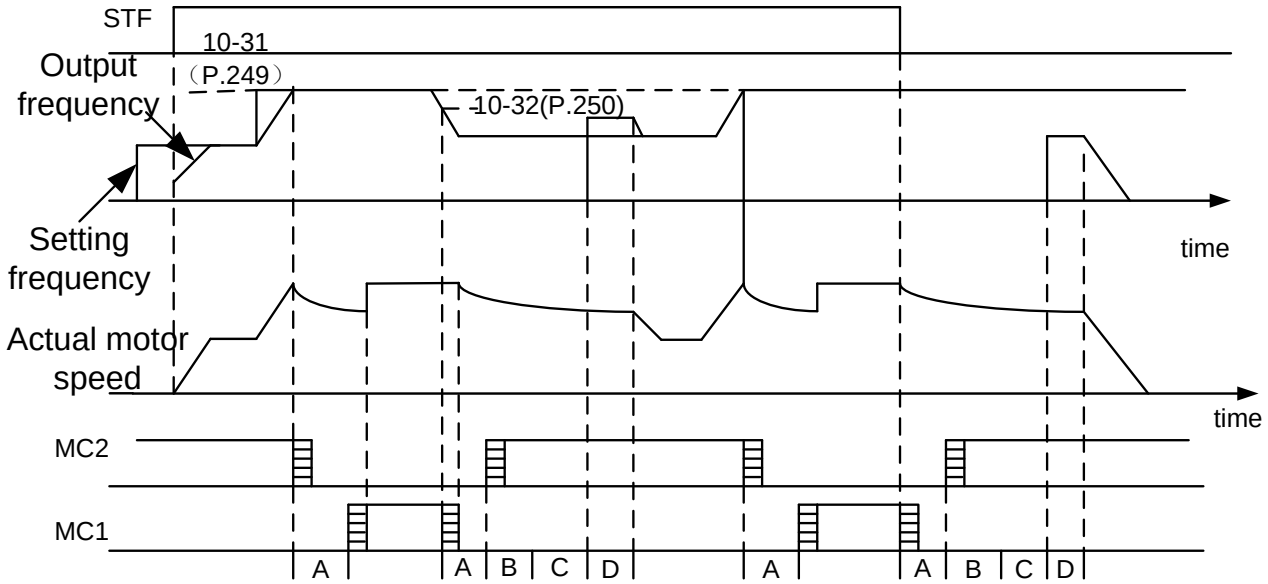

During automatic switching, A: 10-29(P.247) is MC switching interlock time, B: 10-30(P.248) is start-up and waiting time, C: 10-09(P.57) is restart and free running time, D: 10-10(P.58) is restart and rising time.

Note: 1. When the motor runs at a frequency of 50Hz (or 60Hz), the efficiency will be higher at a normal power supply.

2. When switching to normal power supply, interlocking must be applied to prevent the inverter from giving overcurrent alarm. Once the motor is stopped, restart it via the inverter. If applying a power frequency switching sequence function which can output a signal activating the magnetic contactor, the switching interlock can be performed by the inverter and the complex normal power supply.

3. This function is only valid in V/F mode (i.e. 00-21(P.300)=0).

5.10.12 Power failure stop function

- If the inverter power supply is suddenly cut off during operation, this function can maintain the output of the inverter via regenerative energy to slow down and stop the motor.

Parameter	Name	Default	Setting range	Content
10-33 P.273	Power-off stop mode selection	0	0	No deceleration and stop function at power-off
			1	No insufficient voltage avoidance (when power failure due to insufficient voltage, the inverter will slow down and stop)
			2	No insufficient voltage avoidance (when power failure due to insufficient voltage, the inverter will slow down and stop. Restore reacceleration during power-off deceleration)
			11	There is insufficient voltage avoidance (when power failure due to insufficient voltage, the inverter will slow down and stop)
			12	There is insufficient voltage avoidance (when power failure due to insufficient voltage, the inverter will slow down and stop. Restore reacceleration during power-off deceleration)
10-34 P.274	Subtract the frequency at the beginning of deceleration	3.00Hz	0~20.00Hz	Normally it can run at the initial value, please adjust according to the load specification (inertia, torque)
10-35 P.275	Deceleration processing of start frequency	50.00Hz	0~120.00Hz	If the output frequency is⩾10-35 (P.275), the deceleration starts from the output frequency-10-34 (P.274); If the output frequency is<10-35 (P.275), the deceleration starts from the output frequency
			99999	The deceleration starts from the output frequency-10-34 (P.274)
10-36 P.276	Deceleration time during power failure 1	5.00s	0~360.00s/0~3600.0s	Set the deceleration time to the set frequency of 10-38 (P.278)
10-37 P.277	Deceleration time during power failure 2	99999	0~360.00s/0~3600.0s	Set the deceleration time below the set frequency of 10-38 (P.278)
			99999	The same as 10-36 (P.276)
10-38 P.278	Deceleration time during power failure switchover frequency	50.00Hz	0~650.00Hz	Set the frequency of switching the deceleration time from the 10-36 (P.276) set value to the 10-37 (P.277) set value
10-39 P.279	UV avoidance voltage gain	100.0%	0~200.0%	Adjust the responsiveness of insufficient voltage avoidance operation

Setting Power failure stop function

- If 10-33(P.273) is set to “1”/”11” (and 10-09(P.57)=”99999”), the inverter will slow down and stop after power failure; If 10-33(P.273) is set to “2”/”12”, the inverter will slow down and stop after power failure, and the inverter will accelerate again after power supply is restored during deceleration.

  10-34(P.274) is set according to load inertia. If the load inertia is large, a small set value of 10-34(P.274) can generate enough regenerative energy (In general, 3.00Hz is sufficient).
  Decelerate at a deceleration time set in 10-36(P.276) (The deceleration time is set to the time from 01-09 (P.20) acceleration/deceleration reference frequency to stop).
  10-38(P.278) is the switching frequency between deceleration time 1 and deceleration time 2 for power failure. If 10-37(P.277) is not set, the deceleration will still be carried out according to the set time of 10-36(P.276).
  10-39(P.279) is the UV avoidance voltage gain when 10-33(P.273)=”11”/”12”. If 10-33(P.273)=”11”/”12”is not set, 10-39(P.279) will be invalid.

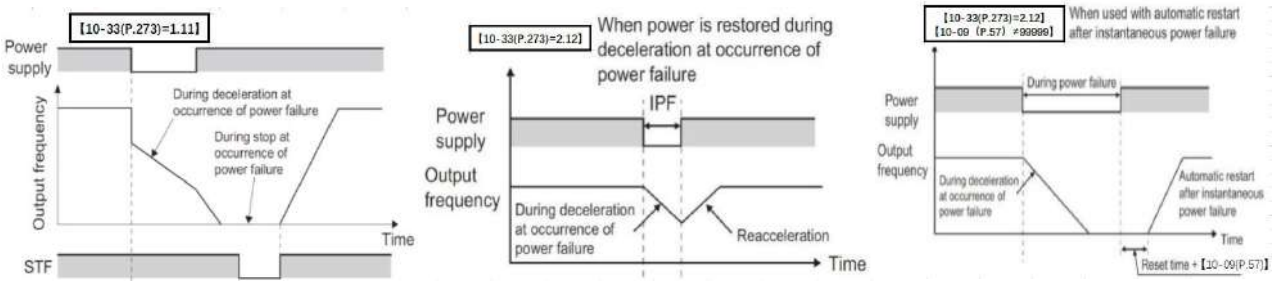

◆ Insufficient voltage avoidance (10-33(P.273) = "11", "12"):

When setting 10-33(P.273)=”11”/”12”, reduce the frequency to avoid insufficient voltage during power failure deceleration.

The frequency drop trend and responsiveness can be adjusted by 10-39(P.279). If the set value is larger, the response to bus voltage changes will be better. However, if the load inertia is large, the regenerative energy will also be large, so 10-39(P.279) should be set smaller at this time.

Note: 1. The deceleration and stop function during power failure is only applicable to V/F control mode. 2. The deceleration and stop function during power failure is not available in the DC bus power supply status.

5.10.13 VF complete separation

➢ Voltage given mode, voltage acceleration/deceleration time and voltage deceleration mode at VF complete separation.

Parameter	Name	Default	Setting range	Content	
10-40 P.700	VF separated voltage source	0	0	Number given 10-41 (P.701)	
			1	Analog quantity given or HDI pulse given	
10-41 P.701	VF separated voltage value	380.00/440.00V	0~440.00V	440V voltage range	50Hz (when 00-24(P.189)=1)/60Hz (when 00-24(P.189)=0) system setting
10-42 P.702	VF separated voltage acceleration time	0.0s	0~1000.0s	The time from 0 accelerating to the rated motor voltage	
10-43 P.703	VF separated voltage deceleration time	0.0s	0~1000.0s	The time from the rated motor voltage decelerating to 0	
10-44 P.704	VF separated shutdown mode selection	0	0	Frequency/voltage independently reduced to 0	
			1	Reduce the voltage to zero and then reduce the frequency	

Settin VF complete separation

- Parameters 10-40(P.700)~10-44(P.704) are only valid when 01-12(P.14)=”14”. VF complete separation mode is usually applied to induction heating, inverter power supply and torque motor control.
- The voltage source selection of VF complete separation is similar to frequency source selection, which can be given by digital quantity or external analog terminal or HDI terminal.
- The frequency acceleration time of VF complete separation refers to the time (01-06(P.7)) when the frequency accelerates from 0 to the reference frequency, and the frequency deceleration time refers to the time (01-07(P.8)) when the frequency decelerates from the reference frequency to 0. The voltage acceleration time of VF complete separation means the time t1(10-42(P.702)) during which the voltage accelerates from 0 to the rated motor voltage, and the voltage deceleration time means the time t2(10-43(P.703)) during which the voltage decelerates from the rated motor voltage to 0.

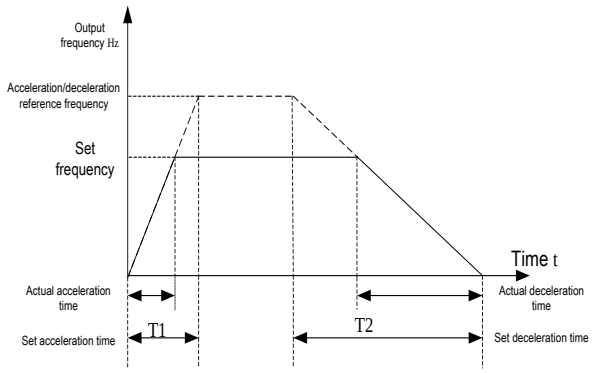

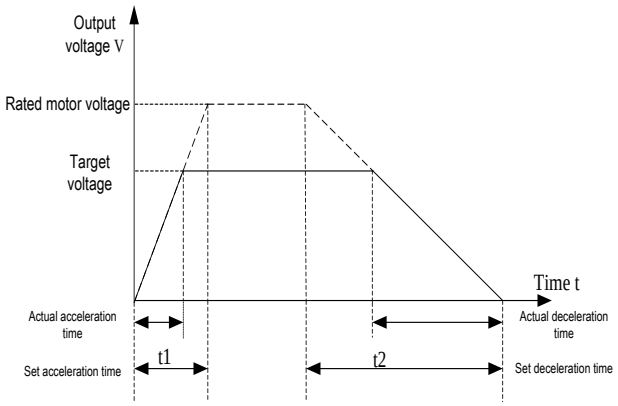

- When setting the digital voltage by using 10-41(P.701), the set voltage value cannot exceed the rated motor voltage.
- If the set voltage acceleration time is less than the frequency acceleration time or the voltage deceleration time is greater than the frequency deceleration time, voltage stall/current stall may occur in the acceleration/deceleration process, resulting in alarm/alarm. Therefore, it is recommended to set 10-42(P.702) to be greater than 01-06(P.7) and 10-43(P.703) to be less than 01-07(P.8).

5.10.14 Regeneration and avoidance function

- When the load inertia of the inverter is relatively larger, during deceleration or other processes, PN voltage is easy to rise due to the influence of regenerative energy, thus reporting OV alarm. This function maintains the PN voltage of the inverter at a fixed level by adjusting the output frequency and output voltage of the inverter, thus preventing the PN voltage from rising to OV level.

Parameter	Name	Default	Setting range	Content
10-45 P.267	Regeneration avoidance operation selection	0	0	No regeneration and avoidance function
			1	The regeneration and avoidance function is valid during operation (automatic mode, automatic calculation of acceleration and deceleration during operation)
			2	Regenerative avoidance is valid only at constant speed (automatic mode, automatic calculation of acceleration and deceleration during action)
			11	The regeneration and avoidance function is valid during operation (manual mode, acceleration and deceleration are set by 10-49 (P.271) and 10-50 (P.272) during operation)
			12	Regenerative avoidance is valid only at constant speed (manual mode, acceleration and deceleration are set by 10-49 (P.271) and 10-50 (P.272) during operation)
10-46 P.268	Regeneration avoidance operation voltage level	760V	310~800V	440V type
10-47 P.269	DC bus voltage detection sensitivity at deceleration	0	0	Prevent regeneration avoidance from invalidation according to bus voltage change rate
			1~5	Set detection sensitivity of bus voltage change rate, the larger the number, the higher the sensitivity.
10-48 P.270	Regeneration avoidance frequency compensation value	6.00Hz	0~10.00Hz	Set the limitation of regenerative avoidance frequency compensation
			99999	No frequency limit
10-49 P.271	Regeneration avoidance voltage gain coefficient	100.0%	0~400.0%/ 0~40.00%	The setting range is related to the setting value of 10-45 (P.267). If 10-45 (P.267) >10, the setting range is 0~40.00%; If 0-45 (P.267) <10, the setting range is 0-400.0%. Adjust the response speed during regeneration and avoidance operation. Increasing the set value will improve the response to the bus voltage changes. The output frequency may be unstable. If the vibration cannot be reduced even if the set value of 10-49 (P.271) is reduced, please reduce the set value of 10-50 (P.272).
10-50 P.272	Regeneration avoidance frequency gain coefficient	100.0%	0~400.0%/ 0~40.00%	

Setting Regeneration and avoidance function

- The role of regeneration and avoidance function: In case of rising of DC bus voltage and too large of the regeneration energy, the DC bus voltage will be too high, and the inverter will report OV alarm. The regeneration and avoidance function is to reduce the bus voltage by way of increasing the output frequency of the inverter when the regeneration voltage exceeds the level, thus avoiding the inverter from reporting OV alarm (as shown in the following diagram).

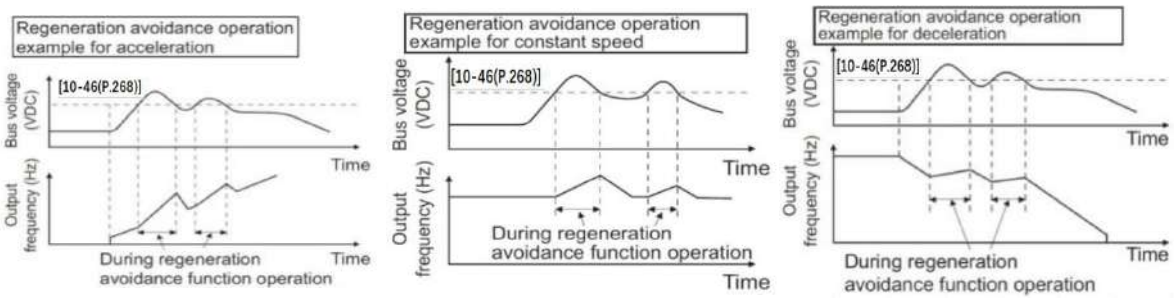

5.10.15 Over-excitation deceleration function

- The over-excitation deceleration function increases the energy consumption of the motor by increasing the magnetic flux at deceleration and stop, which can shorten the deceleration time without braking resistor-.

Parameter	Name	Default	Setting range	Content
10-51 P.264	Over-excitation deceleration selection	0	0	No over-excitation deceleration function
			1	Having over-excitation deceleration function
10-52 P.265	Over-excitation current level	150.0%	0~200.0%	At over-excitation deceleration, the output current is above the set level, and over-excitation gain will automatically decrease
10-53 P.266	Over-excitation gain	1.10	1.00~1.40	---

Setting Over-excitation deceleration function

◆ Over-excitation deceleration (10-51(P.264)="1")

Over-excitation control can restrain the rise of DC bus voltage, and the greater the over-excitation gain, the greater the restraining effect.

If voltage stall occurs during over-excitation deceleration, the deceleration time should be lengthened or the over-excitation gain 10-53(P.266) should be increased.

If current stall occurs during over-excitation deceleration, the deceleration time should be lengthened or the over-excitation gain 10-53(P.266) should be reduced.

Note: 1. Regenerative energy is mainly consumed in the form of heat inside the motor. Therefore, frequent use of the over-excitation deceleration function will cause the temperature rising inside the motor.
2. If inputting a run command during over-excitation deceleration, the over-excitation deceleration function will be cancelled and the inverter will be accelerated to the set frequency again.
3. The over-excitation deceleration function cannot be applied when using PM motor.

5.10.16 Short-circuit brake function at PM motor start

- This parameter is used for PM without PG vector control mode. Please refer to parameters 00-21(P.300) and 00-22 (P.370) for setting the motor control mode.

Parameter	Name	Default	Setting range	Content
10-54 P.362	Short-circuit brake time at PM motor start	0.0s	0.0~60.0s	---

◆ Set the time for the operation of short-circuit braking when starting. The three phases are short-circuited by IGBT switching, thus generating the braking torque of the motor and making the PM motor in free running stop and start again.

Note: Short-circuited braking cannot prevent PM motor from rotating due to external force. Please use DC brake at this time.

5.10.17 Built-in PLC function

➢ This parameter is used for setting the built-in PLC function.

Parameter	Name	Default	Setting range	Content
10-55 P.780	PLC operation selection	0	0	PLC function invalid
			1	PLC function is valid, PLC RUN signal comes from external terminal input signal or 10-56 (P.781).
			2	The PLC function is valid, and the signal of PLC RUN comes from the input signal of the external terminal.
10-56 P.781	PLC RUN/STOP control	0	0	No influence.
			1	PLC RUN
10-57 P.782	PLC program erasure	0	0	Invalid
			1	Erase PLC program, the parameter value will be 0 after successful erasing.
10-58 P.783	PLC component monitoring selection	0	0~326	PLC component monitoring type selection
10-59 P.784	PLC component monitoring value	Read only	Read only	PLC component monitoring status

Setting Built-in PLC function

◆ Select any one terminal from the external input terminals M0, M1, M2, STF, STR, M3, M4, M5, RES, HDI and the input terminals of the external expansion board EB362R, and set its corresponding function as PLC_ON_STOP (i.e. its corresponding parameter setting value is 60). In this way, the RUN signal of PLC can be controlled. Please refer to 5.4 for the application of external input terminals and expanded digital input terminals.

◆ PLC running status when 10-55(P.780)=1

P.781	External PLC_ON_STOP signal	PLC status
0	0	STOP
1	0	RUN
0	1	RUN
1	1	RUN

◆ PLC running status when 10-55(P.780)=2

External PLC_ON_STOP signal	PLC status
0	STOP
1	RUN

◆ P.783 selects the monitoring PLC component type, and the value of P.784 is the status of current monitoring PLC components, as shown in the following table.

P.783	P.784	P.783	P.784
1	X0~X17 (The name is octal)	20	T0~T7 (bit)
2	X20~X25 (The name is octal)	21	C0~C7 (bit)
3	Y0~Y17 (The name is octal)	22	M8000~M8015
4	Y20~Y23 (The name is octal)	23	M8016~M8031
5	M0~M15	24	M8032~M8047
6	M16~M31	25	M8048~M8063
7	M32~M47	26	M8064~M8079
8	M48~M63	27~52	Reserve

P.783	P.784	P.783	P.784
9	M64~M79	53~60	T0~T7 set value (character)
10	M80~M95	61~68	Reserve
11	M96~M111	69~76	C0~C7 set value
12	M112~M127	77~84	Reserve
13	M128~M143	85~92	T0~T7 current value (character)
14	M144~M159	93~100	Reserve
15	M160~M175	101~108	C0~C7 current value (character)
16	M176~M191	109~116	Reserve
17	M192~M207	117~164	D0~D47
18	M208~M223	165~326	D8000~D8161
19	M224~M239		

5.11 Speed and torque control parameter group 11

Parameter group	Parameter number	Parameter name	Setting range	Default	Reference page
11-00	P.320	Speed control proportional coefficient 1	0~200.00	10.00	250
11-01	P.321	Speed control integral time 1	0~20.000s	0.500s	250
11-02	P.322	PI coefficient switchover frequency 1	11-25 (P.414)~11-05 (P.325)Hz	5.00Hz	250
11-03	P.323	Speed control proportional coefficient 2	0~200.00	10.00	250
11-04	P.324	Speed control integral time 2	0~20.000s	0.500s	250
11-05	P.325	PI coefficient switchover frequency 2	11-02 (P.322)~650.00Hz	10.00Hz	250
11-06	P.326	Current control proportional coefficient	0~20	0	250
11-07	P.327	PM motor type	0: SPM 1: IPM	0	252
11-08	P.328	PM motor initial position detection method	0: Pull-in mode 1: High frequency pulse vibration mode	0	252
11-09	P.329	PM motor acceleration id	0~200%	80%	252
11-10	P.330	PM motor constant speed id	0~200%	0%	252
11-11	P.331	PM motor estimated speed filtering time	0~1000ms	2ms	252
11-19	P.408	Forward-rotation electronic torque limit	0~400.0%	200.0%	253
11-20	P.409	Reverse-rotation regenerative torque limit	0~400.0%	200.0%	253
11-21	P.410	Reverse-rotation electronic torque limit	0~400.0%	200.0%	253
11-22	P.411	Forward-rotation regenerative torque limit	0~400.0%	200.0%	253
11-23	P.412	Zero-speed proportional coefficient	0~200.00	10.00	250
11-24	P.413	Zero-speed integral time	0~20.000s	0.500s	250
11-25	P.414	Zero-speed switching frequency	0~11-02 (P.322)Hz	5.00Hz	250
11-26	P.415	IM motor estimated speed filtering time	0-100.00ms	0	251
11-30	P.371	Second motor speed control proportional coefficient 1	0~200.00 99999	10.00	254
11-31	P.372	Second motor speed control integral time 1	0~20.000s 99999	0.500s	254
11-32	P.373	Second motor PI coefficient switchover frequency 1	0~11-35 (P.376)Hz 99999	5.00Hz	254
11-33	P.374	Second motor speed control proportional coefficient 2	0~200.00 99999	10.00	254

Parameter group	Parameter number	Parameter name	Setting range	Default	Reference page
11-34	P.375	Second motor speed control integral time 2	0~20.000s 99999	0.500s	254
11-35	P.376	Second motor PI coefficient switchover frequency 2	11-32(P.373)~650.00Hz 99999	10.00Hz	254
11-36	P.377	Second motor current control proportional coefficient	0~20 99999	0	254
11-37	P.378	Second PM motor type	0: SPM 1: IPM 99999	0	255
11-38	P.379	Second PM motor initial position detection method	0: Pull-in mode 1: High frequency pulse vibration mode 99999	0	255
11-39	P.380	Second PM motor acceleration id	0~200% 99999	80%	255
11-40	P.381	Second PM motor constant speed id	0~200% 99999	0%	255
11-41	P.382	Second PM motor estimated speed filtering time	0~1000ms 99999	2ms	255
11-43	P.366	PM motor speed estimation observer Kp	0~65000	30	255
11-44	P.367	PM motor speed estimation observer Ki	0~65000	10000	255
11-48	P.387	zero-speed bandwidth of velocity loop	0~100.0Hz	5.0Hz	256
11-49	P.388	Low-speed bandwidth of velocity loop	0~100.0Hz	5.0Hz	256
11-50	P.389	High-speed bandwidth of velocity loop	0~100.0Hz	5.0Hz	256
11-51	P.390	Velocity loop self-tuning selection	0: Invalid velocity loop self-tuning function 1: Valid velocity loop self-tuning function	0	256
11-52	P.368	Velocity loop output low-pass filter time constant	0~500.0ms	0	256

5.11.1 Control parameter

➢ When the inverter runs at different frequencies, select and set different velocity loop PI parameters according to the following parameter

Parameter	Name	Default	Setting range	Content
11-00 P.320	Speed control proportional coefficient 1	10.00	0~200.00	---
11-01 P.321	Speed control integral time 1	0.500s	0~20.000s	---
11-02 P.322	PI coefficient switchover frequency 1	5.00Hz	11-25 (P.414)~11-05 (P.325)Hz	---
11-03 P.323	Speed control proportional coefficient 2	10.00	0~200.00	---
11-04 P.324	Speed control integral time 2	0.500s	0~20.000s	---
11-05 P.325	PI coefficient switchover frequency 2	10.00Hz	11-02 (P.322)~650.00Hz	---
11-06 P.326	Current control proportional coefficient	0	0~20	This coefficient determines the responsiveness of IM motor torque control
11-23 P.412	Zero-speed proportional coefficient	10.00	0~200.00	
11-24 P.413	Zero-speed integral time	0.500s	0~20.000s	
11-25 P.414	Zero-speed switching frequency	5.00Hz	0~11-02 (P.322)Hz	

Setting Control parameter

◆ 11-00 (P.320) and 11-01 (P.321) are PI adjustment parameters when the operating frequency is less than switching frequency 1 (11-02 (P.322)), while 11-03 (P.323) and 11-04 (P.324) are PI adjustment parameters when the operating frequency is greater than switching frequency 2 (11-05 (P.325)). The PI parameters of the frequency band between switching frequency 1 and switching frequency 2 are linear switching of two groups of PI parameters. As shown in the following diagram:

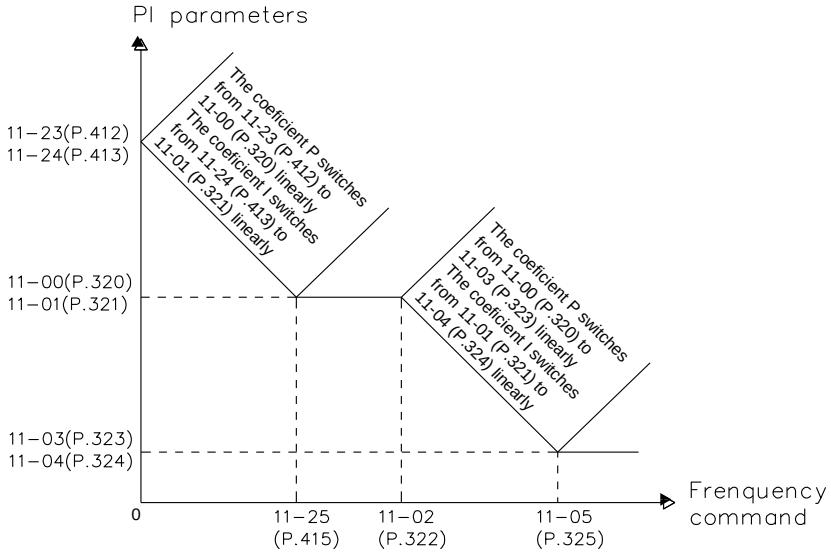

◆ 11-00 (P.320) /11-03 (P.323) /11-23 (P.412) are used to set the proportional gain at speed control (Setting this value

larger will make the following feature to speed command changes better and make the speed changes caused by external interference smaller).

- 11-01 (P.321) /11-04 (P.324) /11-24 (P.413) are used to set the integral time at speed control (If the speed changes due to external interference, setting this value smaller will shorten the time for the speed to return to the original speed).
- 11-06 (P.326) is used to set the proportional coefficient at IM motor current control (Setting this value larger will make the following feature to current command changes better)

Note: 1. If 11-00 (P.320) /11-03 (P.323) /11-23 (P.412) are used to increase the set value of the speed control gain, the response time can be increased. However, too large a set value will cause vibration and noise.
2. Reducing the speed control integral coefficient 11-01 (P.321) /11-04 (P.324) /11-24 (P.413) can shorten the retry time at the speed changes. But too small a value will produce overshoot.
3. Increasing the set point of 11-06 (P.326) will improve the responsiveness of the current adjuster. However, too large a set value will lead to current control oscillation and large electromagnetic noise.

Setting Adjuster parameter

- Increasing the set point of 11-06 (P.326) will improve the responsiveness of the current adjuster. However, too large a set value will lead to current loop oscillation and large electromagnetic noise.

5.11.2 IM motor estimated rotation speed low-pass filter time constant

➢ Set IM motor estimated rotation speed low-pass filter time at sensorless vector control

Parameter	Name	Default	Setting range	Content
11-26 P.415	IM motor estimated speed filtering time	0ms	0~100.00ms	Valid only when 00-21(P.300)=3

Setting IM motor estimated rotation speed low-pass filter time setting

- In case of sensorless vector control of IM motor, If the motor control generates oscillation, 11-26 can be adjusted appropriately but usually without setting.

5.11.3 PM motor setting

➢ The parameters setting below can improve the SVC control characteristic of PM motor

Parameter	Name	Default	Setting range	Content
11-07 P.327	PM motor type	0	0	SPM
			1	IPM
11-08 P.328	PM motor initial position detection method	0	0	Pull-in mode
			1	High frequency pulse vibration mode
11-09 P.329	PM motor acceleration id	80%	0~200%	id given at acceleration of PM motor, valid only when 00-21(P.300)=6
11-10 P.330	PM motor constant speed id	0%	0~200%	id given at constant speed of PM motor, valid only when 00-21(P.300)=6
11-11 P.331	PM motor estimated speed filtering time	2ms	0~1000ms	PM motor estimated rotation speed filter time constant, valid only when 00-21(P.300)=6

Setting PM motor control setting

When 11-08 (P.328) =0, detect the initial magnetic pole position of rotor by pull-in method. If the motor is started with heavy load, the start-up may fail.

When 11-08 (P.328) =0, detect the initial magnetic pole position of rotor by means of high-frequency pulse vibration, and electromagnetic noise may occur when the motor is started.

11-09 (P.329) is the current used to pull in the magnetic poles at the PM motor starting, with 05-05 (P.306) (rated motor current) being 100%. Setting the pull-in current flowing through acceleration/deceleration process will obtain better results when adjusting in the following situations:

If a larger starting torque is required, increase the set value; if the current flowing through acceleration process is too large, reduce the set value.

◆ 11-10 (P.330) is the current used to pull in the magnetic poles in order to make the magnetic pole position more effective when the PM motor is running, with 05-05 (P.306) (rated motor current) being 100%. Set the D-axis current flowing through the motor in constant speed operation and adjust it in the following situations:

If the motor speed is unstable due to offset during constant speed operation, increase the set value; if the current flowing in the light load and constant speed operation is too large, reduce the set value.

◆ 11-11 (P.331) is the PM motor speed observer filtering time constant, which usually does not need to be adjusted.

5.11.4 Torque limit

➢ The torque limit values of the four quadrants can be respectively set through parameters.

Parameter	Name	Default	Setting range	Content
11-19 P.408	Forward-rotation electronic torque limit	200.0%	0~400.0%	Set the torque limit of the first quadrant
11-20 P.409	Reverse-rotation regenerative torque limit	200.0%	0~400.0%	Set the torque limit of the second quadrant
11-21 P.410	Reverse-rotation electronic torque limit	200.0%	0~400.0%	Set the torque limit of the third quadrant
11-22 P.411	Forward-rotation regenerative torque limit	200.0%	0~400.0%	Set the torque limit of the fourth quadrant

Setting Torque limiting function of four quadrants

◆ If 11-19(P.408)~11-22(P.411) is set to 100.0%, the maximum output torque of the inverter is the rated motor torque when corresponding to vector control.

◆ The formula for calculating the rated torque of the motor is: $T(N.M)=\frac{P(W)}{\omega(rad/s)}$, wherein P(W) is calculated according to parameter 05-01(P.302) and ω(rad/s) is calculated according to parameter 05-06 (P.307): $\frac{2\pi\times P.307}{60}(rad/s)$.

Torque limiting of the four quadrants is shown in the following figure: :

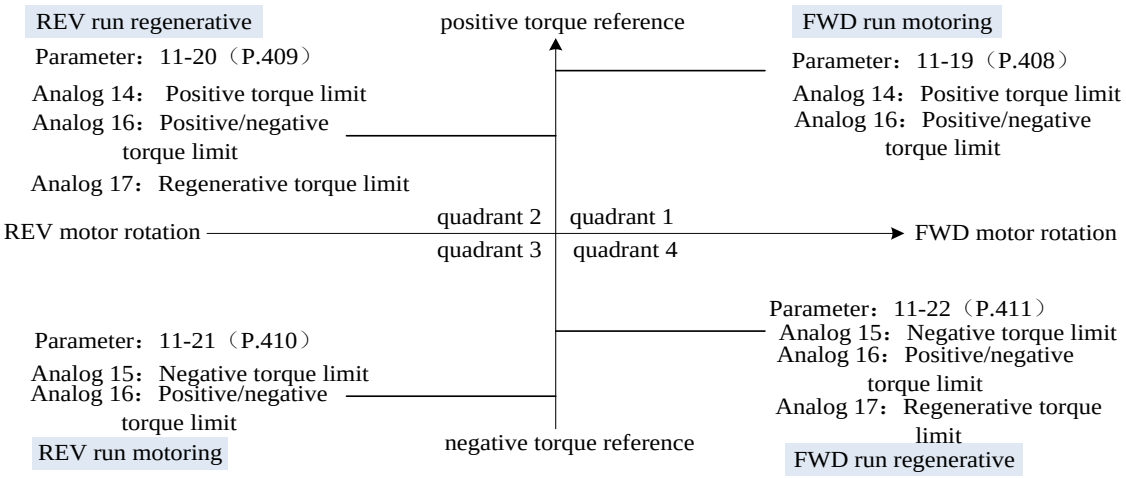

◆ Among the torque limit set by parameters, torque limit set by analog quantity and inverter output current limit set by 06-01(P.22), the minimum torque limit is valid.

5.11.5 The second motor control parameter

➢ The set second motor control parameter, along with the digital input terminals, can realize the driving function of the second motor

Parameter	Name	Default	Setting range	Content
11-30 P.371	Second motor speed control proportional coefficient 1	10.00	0~200.00 99999	---
11-31 P.372	Second motor speed control integral time 1	0.500s	0~20.000s 99999	---
11-32 P.373	Second motor PI coefficient switchover frequency 1	5.00Hz	0~11-35 (P.376)Hz 99999	---
11-33 P.374	Second motor speed control proportional coefficient 2	10.00	0~200.00 99999	---
11-34 P.375	Second motor speed control integral time 2	0.500s	0~20.000s 99999	---
11-35 P.376	Second motor PI coefficient switchover frequency 2	10.00 Hz	11-32(P.373)~650.00 Hz 99999	---
11-36 P.377	Second motor current control proportional coefficient	0	0~20 99999	---

Setting The second motor control parameter

◆ If 00-22(P.370)≠99999 and RT signal is ON, the second motor control parameters 11-30(P.371)~11-36(P.377) are valid. Please refer to 5.2.10 for the second function parameter.

◆ Please refer to 05-22(P.332)~05-39(P.395) for the second motor parameters.

◆ Please refer to the parameter function descriptions from 11-00 (P.320) ~11-06 (P.326) for the setting of this group of parameters.

5.11.6 The second PM motor setting

➢ The set second PM motor control parameter, along with the digital input terminals, can realize the driving function of the second PM motor

Parameter	Name	Default	Setting range	Content
11-37 P.378	Second PM motor type	0	0	SPM
			1	IPM
			99999	---
11-38 P.379	Second PM motor initial position detection method	0	0	Pull-in mode
			1	High frequency pulse vibration mode
			99999	---
11-39 P.380	Second PM motor acceleration id	80%	0~200%	---
			99999	
11-40 P.381	Second PM motor constant speed id	0%	0~200%	---
			99999	
11-41 P.382	Second PM motor estimated speed filtering time	2ms	0~1000ms	---
			99999	

Settin PM motor control parameter

- If 00-22(P.370)≠99999 and RT signal is ON, the second motor control parameters 11-30(P.371)~11-36(P.377) are valid. Please refer to 5.2.10 for the second function parameter.
- Please refer to 05-22(P.332)~05-39(P.395) for the second motor parameters.
- Please refer to the parameter function descriptions from 11-07(P.327)~11-11(P.331) for the setting of this group of parameters.

5.11.7 PM motor speed estimation observer parameters

➢ The setting PM motor speed estimation observer parameters can improve the stability of SVC mode operation of PM motor

Parameter	Name	Default	Setting range	Content
11-43 P.366	PM motor speed estimation observer Kp	30	0~65000	---
11-44 P.367	PM motor speed estimation observer Ki	10000	0~65000	---

Setting PM motor SVC mode speed estimation observer parameters

Set the PM motor SVC mode operation (00-21(P.300)=6). If the motor operation is abnormal, the values of 11-43(P.366) and 11-44(P.367) can be manually adjusted, thus making the SVC mode of the PM motor finally operate stably.

5.11.8 Velocity loop adjuster parameter

➢ By setting the velocity loop adjuster parameter, the responsiveness of the velocity loop can be adjusted

Parameter	Name	Default	Setting range	Content
11-48 P.387	zero-speed bandwidth of velocity loop	5.0Hz	0~100.0Hz	---
11-49 P.388	Low-speed bandwidth of velocity loop	5.0Hz	0~100.0Hz	---
11-50 P.389	High-speed bandwidth of velocity loop	5.0Hz	0~100.0Hz	---
11-51 P.390	Velocity loop self-tuning selection	0	0~1	0: Invalid velocity loop self-tuning function
				1: Valid velocity loop self-tuning function

Settin Velocity loop adjuster parameter

◆ When 11-51(P.390)=0, the velocity loop PI parameters (11-00 (P.320), 11-01 (P.321), 11-03 (P.323), 11-04 (P.324), 11-23 (P.412), 11-24 (P.413)) can be manually set;

When 11-51(P.390)=1, the velocity loop PI parameters (11-00 (P.320), 11-01 (P.321), 11-03 (P.323), 11-04 (P.324), 11-23 (P.412), 11-24 (P.413)) will be automatically set, which can obtain the ideal velocity loop response characteristic along with the reasonable setting of system inertia (05-17(P.318)/05-18(P.319));

◆ Please adjust 11-48(P.387), 11-49(P.388) and 11-50(P.389) respectively according to the requirements of response characteristics. The larger the set value, the faster the velocity loop responds. However, if the setting is too large, the system will oscillate. It is recommended to gradually increase the set values of 11-48(P.387)~11-50(P.389), and return to the last-step set value once the system oscillates.

5.11.9 Velocity loop output low-pass filter time constant

➢ Set the low-pass filter time of the torque command output by the velocity loop

Parameter	Name	Default	Setting range	Content
11-52 P.368	Velocity loop output low-pass filter time constant	0ms	0~500.0ms	---

Settin Set the velocity loop output low-pass filter time constant

If vibration is easily caused due to low mechanical rigidity, please gradually increase the set value based on the increment of 1.0ms, which is usually not required to be set.

5.12 Special adjustment parameter group13

Parameter group	Parameter number	Parameter name	Setting range	Default	Reference page
13-00	P.89	Slip compensation coefficient	0~10	0	258
13-01	P.246	Modulation coefficient	0.90~1.20	1.00	258
13-02	P.285	Low frequency vibration suppression factor	0~8	5	259
13-03	P.286	High frequency vibration suppression factor	XX00~XX15 00XX ~15XX	509	259
13-04	P.480	vibration suppression mode	0~3	1	259
13-05	P.481	Vibration suppression factor	0~100.0	10.0	259
13-06	P.482	Vibration suppression Kp	0~500	50	259
13-07	P.483	Vibration suppression time	0~65000	1010	259

5.12.1 Slip compensation V/F

- This parameter can set the compensation frequency and make the running speed of the motor at the rated current is closer to the set running speed, thus improving the accuracy of speed control.

Parameter	Name	Default	Setting range	Content
13-00 P.89	Slip compensation coefficient	0	0~10	0: No slip compensation 10: The compensation value is 3% of the set frequency

Note: 1. This function is only valid in V/F mode (00-21(P.300)="0").
2. At the process of slip compensation, the output frequency may be larger than the set frequency.

5.12.2 Modulation coefficient

- It is used to determine the ratio of the maximum output voltage to the input voltage.

Parameter	Name	Default	Setting range	Content
13-01 P.246	Modulation coefficient	1.00	0.90~1.20	Maximum output voltage ="13-01" × input voltage

Setting Modulation coefficient

- This parameter can be used to obtain the maximum output voltage higher than the input voltage.
- However, if the set value is higher, the waveform of the output voltage will be distorted and contain harmonic waves, thus increasing the torque harmonics and noise of the motor.

5.12.3 Vibration inhibition

➢ It is used to suppress the large fluctuation of inverter output current, large fluctuation of motor speed and motor vibration.

Parameter	Name	Default	Setting range	Content
13-02 P.285	Low frequency vibration suppression factor	5	0~8	If the motor vibrates at a lower frequency, adjust the set value of 13-02
13-03 P.286	High frequency vibration suppression factor	509	XX00~XX15	Valid only when 13-04 (P.480) =1.If the motor vibrates at a higher frequency, adjust the set value of 13-03. It is recommended to gradually increase the set value based on the increment of 1 The setting range of the upper two bits and the lower two bits of 13-03 is 0~15.
			00XX~15XX	
13-04 P.480	vibration suppression mode	1	0~3	0 : vibration suppression disable
				1 : vibration suppression mode 1
				2 : vibration suppression mode 2
				3 : vibration suppression mode 3
13-05 P.481	Vibration suppression factor	10.0	0~100.0	Valid only when 13-04 (P.480) =2
13-06 P.482	Vibration suppression Kp	50	0~500	Valid only when 13-04 (P.480) =3 , If the motor still oscillates under the default setting, 13-06 can be adjusted appropriately, and generally 13-07 does not need to be adjusted
13-07 P.483	Vibration suppression time	1010	0~65000	

Setting Vibration suppression factor

◆ In practical application, whether the vibration is “low-frequency vibration” or “high-frequency vibration” is usually determined by the relationship between the occurring vibration frequency and the rated frequency of the motor, that is:
When the rated frequency of the motor is 50Hz,
If the occurring vibration frequency is lower than 25Hz, it will be deemed as“low-frequency vibration”.
Otherwise, if the occurring vibration frequency is higher than 25Hz, it will be deemed as “high-frequency vibration”.

◆ 13-04 is only valid in VF Mode.

Note: In case of light load condition, the current fluctuation in a specific operating frequency band may occur in the motor, which may cause slight vibration of the motor. If the vibration does not affect the application, it can be ignored.

5.13 User parameter group 15

Parameter group	Parameter number	Parameter name	Setting range	Default	Reference page
15-00	P.900	User registered parameter 1	P parameter mode: 0~1299 Parameter group mode: 00-00~15-99	99999	261
15-01	P.901	User registered parameter 2		99999	261
15-02	P.902	User registered parameter 3		99999	261
15-03	P.903	User registered parameter 4		99999	261
15-04	P.904	User registered parameter 5		99999	261
15-05	P.905	User registered parameter 6		99999	261
15-06	P.906	User registered parameter 7		99999	261
15-07	P.907	User registered parameter 8		99999	261
15-08	P.908	User registered parameter 9		99999	261
15-09	P.909	User registered parameter 10		99999	261
15-10	P.910	User registered parameter 11		99999	261
15-11	P.911	User registered parameter 12		99999	261
15-12	P.912	User registered parameter 13		99999	261
15-13	P.913	User registered parameter 14		99999	261
15-14	P.914	User registered parameter 15		99999	261
15-15	P.915	User registered parameter 16		99999	261
15-16	P.916	User registered parameter 17		99999	261
15-17	P.917	User registered parameter 18		99999	261
15-18	P.918	User registered parameter 19		99999	261
15-19	P.919	User registered parameter 20		99999	261

5.13.1 User registered parameter

- The user parameter group is used to register the number of the parameter that does not require the user to restore the factory default value.

Parameter	Name	Default	Setting range	Content
15-00 P.900	User registered parameter 1	99999	P parameter mode: 0~1299 Parameter group mode: 00-00~15-99	---
15-01 P.901	User registered parameter 2	99999		---
15-02 P.902	User registered parameter 3	99999		---
15-03 P.903	User registered parameter 4	99999		---
15-04 P.904	User registered parameter 5	99999		---
15-05 P.905	User registered parameter 6	99999		---
15-06 P.906	User registered parameter 7	99999		---
15-07 P.907	User registered parameter 8	99999		---
15-08 P.908	User registered parameter 9	99999		---
15-09 P.909	User registered parameter 10	99999		---
15-10 P.910	User registered parameter 11	99999		---
15-11 P.911	User registered parameter 12	99999		---
15-12 P.912	User registered parameter 13	99999		---
15-13 P.913	User registered parameter 14	99999		---
15-14 P.914	User registered parameter 15	99999		---
15-15 P.915	User registered parameter 16	99999		---
15-16 P.916	User registered parameter 17	99999		---
15-17 P.917	User registered parameter 18	99999		---
15-18 P.918	User registered parameter 19	99999		---
15-19 P.919	User registered parameter 20	99999		---

Setting User registered parameter

- The parameter values set in this parameter group will not be restored to the factory default value when performing 00-02=5/6(P.999=2/3).
- The parameter value set in this parameter group is the parameter number required to be registered by the user. The parameter values of the registered parameter number will not be restored to the factory default value when performing 00-02=5/6(P.999=2/3).
- Please refer to 5.1.2 parameter management section for the setting of restoring the factory default value.

Note: Please pay attention to the difference between parameter numbers registered in “order number” or “parameter group” mode.

For example, registering the parameter number 01-06(P.7). In the case of “order number”, the parameter number registered is P.7, and P.900=7 will be set; In the “parameter group” mode, the parameter number registered is 01-06 and 15-00=106 will be set.

5.14 Water Supply Parameter Group 16

Parameter group	Parameter number	Parameter name	Setting range	Default	Reference page
16-00	P.1000	Water supply mode selection	0：invalid 1：Ordinary water supply mode 2：Manual soft start mode	0	265
16-01	P.1001	Pump 1 type selection	0：Invalid pump 1：Variable frequency pump 2：Pump power frequency 3：Dormant pump 4：Sewage pump	0	265
16-02	P.1002	Pump 2 type selection	Same as 16-01(P.1001)	0	265
16-03	P.1003	Pump 3 type selection	Same as 16-01(P.1001)	0	265
16-04	P.1004	Pump 4 type selection	Same as 16-01(P.1001)	0	265
16-05	P.1005	Pump 5 type selection	Same as 16-01(P.1001)	0	265
16-06	P.1006	Pump 6 type selection	Same as 16-01(P.1001)	0	265
16-07	P.1007	Pump 7 type selection	Same as 16-01(P.1001)	0	265
16-08	P.1008	Manual soft start switching frequency	0~120.00Hz	50.00Hz	265
16-09	P.1009	Add pump pressure tolerance	0.0~100.0%	10.0%	265
16-10	P.1010	Add pump to judge time	0~3600s	60s	265
16-11	P.1011	Add frequency conversion pump switching frequency	0~120.00Hz	50.00Hz	265
16-12	P.1012	Pump running frequency	0~120.00Hz	50.00Hz	265
16-13	P.1013	Processing frequency pump frequency conversion pump deceleration time	0~360.00s/0~3600.0s	10.00s	265
16-14	P.1014	Reduce pump pressure tolerance	0.0~100.0%	10.0%	266
16-15	P.1015	Reduce pump judgment time	0~3600s	60s	266
16-16	P.1016	Reduce pump operating frequency	0~120.00Hz	20.00Hz	266
16-17	P.1017	Acceleration time of variable frequency pump when reducing pump	0~360.00s/0~3600.0s	10.00s	266
16-18	P.1018	Contactor pull delay	0.1~10.0s	1.0s	266
16-19	P.1019	Closing delay of contactor	0.1~10.0s	1.0s	266
16-20	P.1020	Variable frequency pump wheel cycle	0.0~6000.0h	0.0h	266
16-21	P.1021	Power frequency pump wheel cycle	0.0~6000.0h	0.0h	266
16-22	P.1022	Water supply PID hibernation function selection	0：Hibernation invalid, inverter running PID 1：Hibernate	0	266
16-23	P.1023	Water dormancy wake up pressure tolerance	0.0~100.0%	10.0%	266
16-24	P.1024	Water wake duration	0～3600s	60s	266
16-25	P.1025	Dormancy pump dormant period stop judge time	0~3600s	500s	267

Water Supply Parameter group 16

Parameter group	Parameter number	Parameter name	Setting range	Default	Reference page
16-26	P.1026	Hydraulic overpressure protection collimation	0~200.0%	150.0%	267
16-27	P.1027	Hydraulic overpressure judgment time	0~3600s	500s	267
16-28	P.1028	Hydraulic underpressure protection collimation	0~100.0%	0.0%	267
16-29	P.1029	Hydraulic underpressure judgment time	0~3600s	500s	267

5.14.1 Water supply parameters

Parameter	Name	Default	Setting range	Content
16-00 P.1000	Water supply mode selection	0	0	invalid
			1	Ordinary water supply mode
			2	Manual soft start mode
16-01 P.1001	Pump 1 type selection	0	0	Invalid pump
			1	Variable frequency pump
			2	2：Pump power frequency
			3	3：Dormant pump
			4	4：Sewage pump
16-02 P.1002	Pump 2 type selection	0	Same as 16-01 P.1001)	Same as 16-01(P.1001)
16-03 P.1003	Pump 3 type selection	0	Same as 16-01(P.1001)	Same as 16-01(P.1001)
16-04 P.1004	Pump 4 type selection	0	Same as 16-01(P.1001)	Same as 16-01(P.1001)
16-05 P.1005	Pump 5 type selection	0	Same as 16-01(P.1001)	Same as 16-01(P.1001)
16-06 P.1006	Pump 6 type selection	0	Same as 16-01(P.1001)	Same as 16-01(P.1001)
16-07 P.1007	Pump 7 type selection	0	Same as 16-01(P.1001)	Same as 16-01(P.1001)
16-08 P.1008	Manual soft start switching frequency	50.00Hz	0~120.00Hz	During manual soft start, when the inverter output frequency reaches the frequency set by 16-08 (P.1008), the frequency conversion pump control mode is switched from frequency conversion control to industrial frequency control.
16-09 P.1009	Add pump pressure tolerance	10.0%	0~100.0%	The output frequency of the inverter reaches 16-12 (P.1012), and the feedback pressure <(target pressure-pressure tolerance value) continues for 16-10 (P.1010). After the set time, the pumping conditions are met. , For pumping. The pump pressure tolerance percentage is the percentage corresponding to the target pressure. Pressure tolerance value = target pressure * 16-09 (P.1009).
16-10 P.1010	Add pump to judge time	60s	0~3600s	
16-11 P.1011	Add frequency conversion pump switching frequency	50.00Hz	0~120.00Hz	The pumping action is a variable frequency pump. When the frequency converter output frequency reaches 16-11 (P.1011), the current variable frequency pump will switch to industrial frequency control.
16-12 P.1012	Pump running frequency	50.00Hz	0~120.00Hz	See 16-09 (P.1009) for explanation.
16-13 P.1013	Processing frequency pump frequency conversion pump deceleration time	10.00s	0~360.00s /0~3600.0s	The pumping action is a power frequency pump. The inverter decelerates to 16-16 (P.1016) according to the set deceleration time of 16-13 (P.1013). Perform PID operation again.

Parameter	Name	Default	Setting range	Content
16-14 P.1014	Reduce pump pressure tolerance	10.00%	0.0~100.0%	When the inverter runs to 16-16 (P.1016), the feedback pressure is> (target pressure + pressure tolerance value), and continues for 16-15 (P.1015). After the set time, the pump reduction conditions are met. After reducing the pump, the inverter accelerates to the frequency set by 16-12 at 16-17 (P.1017), and then performs PID operation. The decrementing pump pressure tolerance percentage is the percentage corresponding to the target pressure. Pressure tolerance value = target pressure * 16-14 (P.1014).
16-15 P.1015	Reduce pump judgment time	60s	0~3600s	
16-16 P.1016	Reduce pump operating frequency	20.00Hz	0~120.00Hz	
16-17 P.1017	Acceleration time of variable frequency pump when reducing pump	10.00s	0~360.00s /0~3600.0s	
16-18 P.1018	Contactor pull delay	1.0s	0.1~10.0s	The contactor pull-off delay refers to the time from when the inverter issues a free stop command (at the same time, it issues a frequency inverter contactor disconnection instruction) to the power frequency contactor closing instruction.
16-19 P.1019	Closing delay of contactor	1.0s	0.1~10.0s	Contactor closing delay refers to the time from when the inverter starts the inverter frequency converter contact command before the inverter starts to output before starting the next inverter pump.
16-20 P.1020	Variable frequency pump wheel cycle	0.0h	0.0	Function is invalid
			0.1~6000.0h	The variable frequency pump rotation function is effective, and the set value is the rotation training cycle. To prevent one pump from working for a long time, while other pumps are not working for a long time. Rotate regularly. Generally used for one use and one preparation occasion.
16-21 P.1021	Power frequency pump wheel cycle	0.0h	0.0	Function is invalid
			0.1~6000.0h	The power frequency pump rotation function is valid, and the set value is the rotation training cycle. To prevent one pump from working for a long time, while other pumps are not working for a long time. Rotate regularly.
16-22 P.1022	Water supply PID hibernation function selection	0	0	Hibernation invalid, inverter running PID
			1	Hibernate
16-23 P.1023	Water dormancy wake up pressure tolerance	10.0%	0.0~100.0%	In the dormant state, after the feedback pressure <(target pressure-dormant wakeup pressure tolerance value) and lasts for 16-24 hours, stop the dormant pump and start the variable frequency pump at the same time, and the system exits the dormant state. The water supply sleep wake pressure tolerance is a percentage corresponding to the target pressure. Sleep wake pressure tolerance = target pressure * 16-23 (P.1023).
16-24 P.1024	Water wake duration	60s	0~3600s	

16-25 P.1025	Dormancy pump dormant period stop judge time	500s	0	Sleep pump stop function is invalid
			1~3600s	During sleep, the feedback pressure reaches overpressure and lasts for 16-25 (P.1025).
16-26 P.1026	Hydraulic overpressure protection collimation	150.0%	0.0~200%	The feedback pressure reaches the overpressure level value and continues for 16-27 (P.1027). After the set delay time, the pressure is overpressure. At this time, the external output terminal can output an overpressure indication signal. When it is lower than the over-voltage protection value, and continues for 16-27 (P.1027), after the set delay time, the over-voltage indication signal stops outputting. Overpressure level value = target pressure * 16-26 (P.1026). The undervoltage judgment is similar to the overvoltage situation.
16-27 P.1027	Hydraulic overpressure judgment time	500s	0~3600s	
16-28 P.1028	Hydraulic underpressure protection collimation	0.0%	0.0~100%	
16-29 P.1029	Hydraulic underpressure judgment time	500s	0~3600s	

Setting Multi-pump water supply

◆ Water supply mode (16-00(P.1000))

0：invalid

1：Normal water supply mode

It is suitable for general constant pressure water supply system, and can also be used for constant pressure oil supply, constant pressure ventilation and other systems.

2：Manual soft-start mode

It is used for debugging to determine whether the switching, wiring and logic of the inverter pump are correct. At this time, the inverter does not run PID. In this mode, the inverter can also be used as a soft starter for multiple groups of motors.

◆ Setting of pump type (16-01(P.1001)~16-07(P.1007))

0：Ineffective pump

The corresponding pump is not running and is not involved in system work.

1：Variable frequency pump

The variable frequency pump can be driven by variable frequency or industrial frequency. When the conditions of the switching pump are not met, the pump adopts variable frequency drive. As a variable adjustment pump for the entire constant pressure water supply system, the inverter controls the operation and automatically Adjust the speed of the pump to maintain a constant system pressure. When the switching condition is reached, if there are other standby variable frequency pumps, switch the pump to industrial frequency operation and start the standby variable frequency pump operation. If there is no standby variable frequency pump, the The pump also maintains frequency conversion operation and does not switch power frequency operation.

The SF3 multi-pump water supply system supports a maximum of 6 variable-frequency pumps.

2：Power frequency pump

Power frequency pump can only perform power frequency control. When the electric capacity is sufficient and the power of the pump is below 15kW, it can be started directly at full pressure. If the power of the pump is 18.5kW and above, it is recommended to use a step-down start method, such as star-delta Step-down start, auto-coupled step-down start, soft start and other methods to reduce the impact on the power grid.

The SF3 multi-pump water supply system supports a maximum of 1 variable frequency pump + 6 power frequency pumps or 1 host + 7 power frequency pumps.

3：Dormant pump

The dormant pump is driven by power frequency, but unlike the power frequency pump, it does not participate in system switching. When the dormant function is effective, when the system reaches the pump reduction condition and no pump can be reduced, the system enters the dormant state. During the dormancy, the water pressure exceeds When the level is judged, the dormant pump will be stopped. The sleep pump is only effective in normal water supply mode.

4：Sewage pump

The sewage pump is driven by industrial frequency, but unlike the industrial frequency pump, it does not participate in system switching. The inverter automatically starts and stops the sewage pump according to the water level signal fed back from the water level sensor of the sewage tank.

◆ Conditions under which the pump can be used

1. 16-00(P.1000)，non-zero；
2. 16-01(P.1001)~16-07(P.1007) specify the pump type；
3. If the pump 1 ~ 7 failure function or all pump failure functions are set, the corresponding input terminals should be disconnected.；
4. The external output terminal function parameter sets the frequency conversion power frequency control signal output function of the pump.

◆ Pump

The output frequency of the current inverter is greater than or equal to 16-12 (P.1012), and the feedback pressure < (target pressure-pressure tolerance value), and after the delay time set by 16-10 (P.1010), Pump conditions are met, and pumping treatment is performed. Adding pump order: first add variable frequency pump and then process frequency pump.

◆ Pump reduction

When the inverter output frequency is less than or equal to 16-16 (P.1016), reduce the pump operating frequency and feedback pressure> (target pressure + pressure tolerance value) and continue for 16-15 (P.1015), after the set time The pump reduction conditions are met. Pump reduction sequence: First reduce the power frequency controlled pump with the longest continuous running time (not necessarily a power frequency pump, or a power frequency controlled variable frequency pump).

◆ Dormant

Go to sleep: When the function is valid, if the current running status meets the pump reduction condition and there is no pump to be reduced, the inverter sleeps and stands by and the system enters the sleep state.

Sleep and wake up: In the sleep state, after the feedback pressure <(target pressure-sleep wake up pressure tolerance) for 16-24, the sleep pump is stopped and the system exits the sleep state.

◆ Manual soft start

1.16-00 (P.1000)= 2 The input terminal is set to the manual soft start function.

2. The inverter running command is valid. When the manual soft-start command of the corresponding inverter pump is valid, the pump is soft-started by the inverter and reaches 16-08 (P.1008). After the manual soft-start switching frequency is set, switch to Frequency operation.

◆ System shutdown

When the water supply is stopped, the inverter decelerates and stops, and at the same time, disconnects the power frequency control contactor and stops the power frequency controlled pump. The variable-frequency control contactor of the variable-frequency pump currently in the state of variable-frequency control remains closed.

◆ Sewage pump control

It does not matter whether the system is running or stopped.

Sink tank water level signal is on-off. When the water level of the sewage tank is higher than the upper limit of the sewage tank, the sewage pump is put into operation. After the water level of the sewage tank is lower than the lower limit, the sewage pump is stopped.

Application examples

Example 1： 1 host + 2 power frequency pumps

The system uses one host and two power frequency pumps to achieve constant pressure water supply. The target pressure is set by 08-03 (P.225).

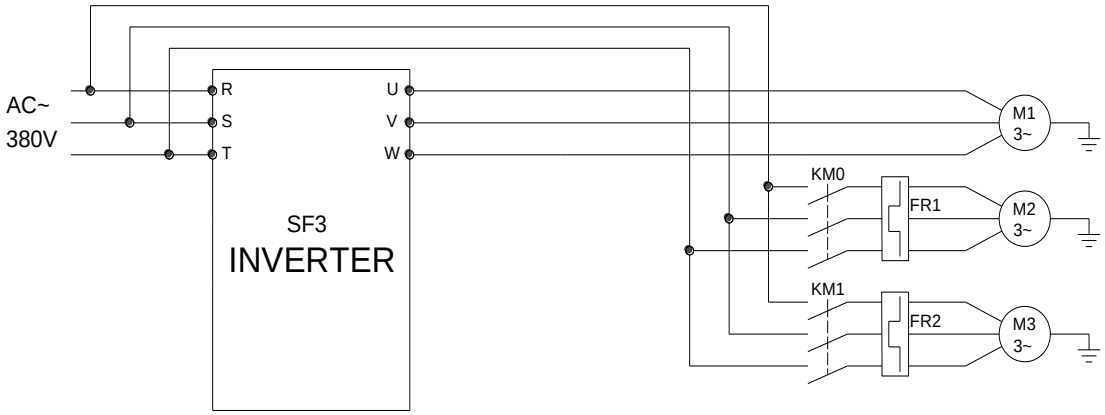

◆ Parameter settings

Parameter	Set value	Description
02-00 P.500	4	2-5 input as PID feedback source
03-10 P.40	13	SO1-SE terminal as power frequency control signal of pump 1
03-11 P.85	15	A1-C1 terminal as power frequency control signal of pump 2
08-00 P.170	1	The PID function is enabled. The selected target pressure is set by 08-03 (P.225), and the feedback comes from the 2-5 input.
08-03 P.225	40.0%	Target pressure is set to 40.0%
16-00 P.1000	1	Normal water supply mode
16-01 P.1001	2	Pump 1 is a power frequency pump
16-02 P.1002	2	Pump 2 is a power frequency pump
16-21 P.1021	24.0h	Power frequency pump performs a timing switching operation at 24.0 hours
Pump increase and decrease pump parameters	Factory default	Add pump and reduce pump parameters using factory values.

◆ Work description

Pump

After starting up, the inverter drives the host to run. When the pumping conditions are met, the inverter decelerates to a

frequency of 16-16 (P.1016) with a deceleration time of 16-13 (P.1013) and starts pump number 2. If the pumping conditions are met again, the No. 3 pump will be started in the same way.

Pump reduction

Reduce the pump first stop running the longest power frequency pump. If the continuous running time of pump No. 2 is the longest, after the pump reduction conditions are met:

(1)The frequency converter accelerates to the frequency set by 16-12 (P.1012) within the time of 16-17 (P.1017), and then disconnects the power frequency control contactor of pump 2 and the frequency converter resumes PID operation.

(2)If the pump reduction conditions are met again, the frequency converter stops the No. 3 pump in the same way.

Power frequency pump rotation

If the current pump 2 is running and the pump 3 is stopped, the system disconnects the power frequency control contactor of the pump 2 and stops the power frequency of the pump 3 Contactor, start No. 3 water pump, complete power frequency pump rotation

Example 2: 1 variable frequency pump + 6 power frequency pumps

The system uses a variable frequency pump and 6 power frequency pumps to achieve constant pressure water supply. The target pressure is set by 08-03 (P.225), and the feedback comes from the voltage signal between the input 2-5 terminals.

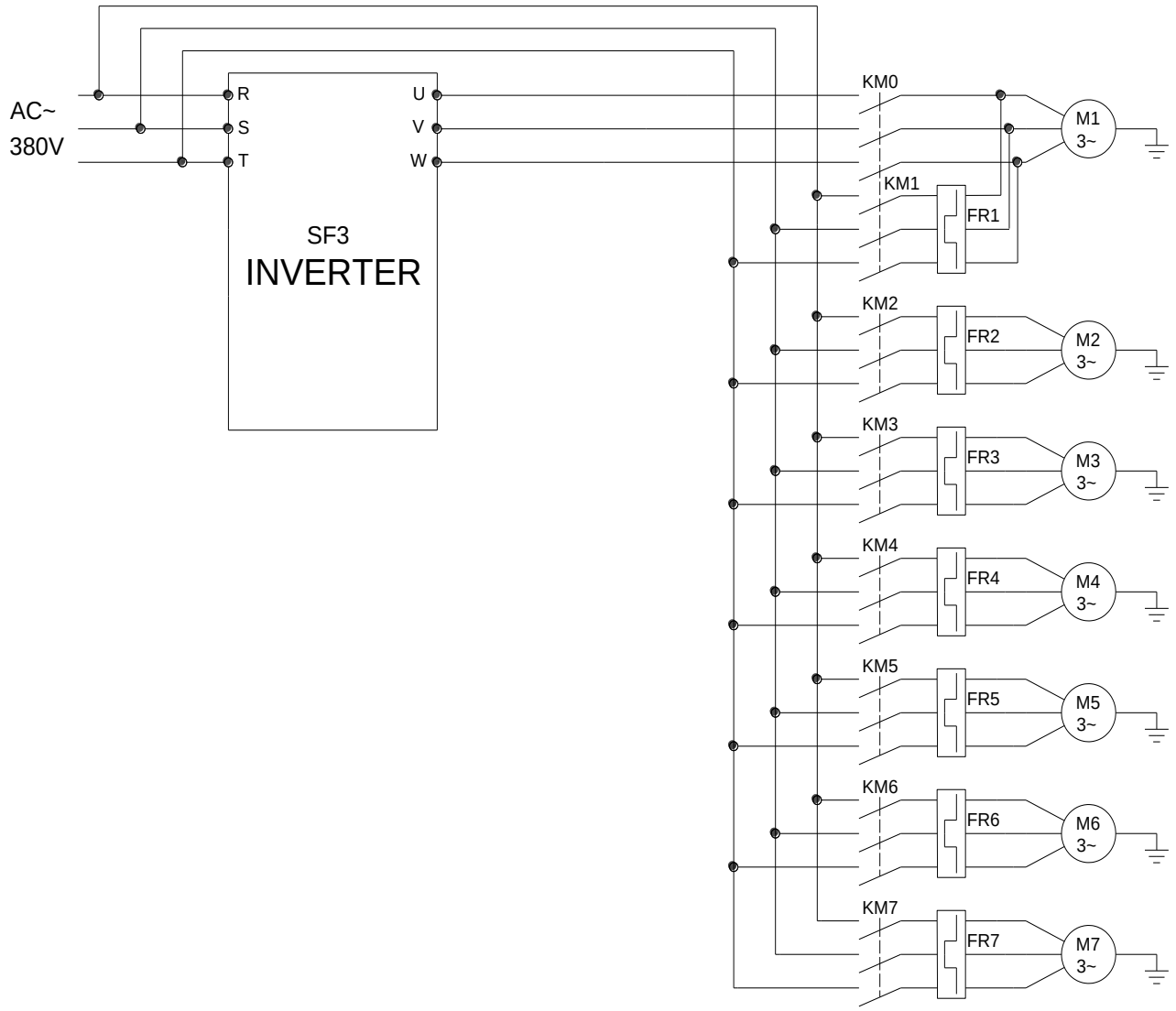

◆ Parameter settings

Parameter	Set value	Description
02-00 P.500	4	2-5 input as PID feedback source
03-03 P.80	80	M0 terminal as pump 2 failure control
03-04 P.81	81	M1 terminal as pump 3 failure control
03-05 P.82	82	M2 terminal as pump 4 failure control

03-06 P.126	83	M3 terminal as pump 5 failure control
03-07 P.127	84	M4 terminal as pump 6 failure control
03-08 P.128	85	M5 terminal as pump 7 failure control
03-09 P.550	86	HDI terminal as all pump failure control
03-10 P.40	12	SO1-SE terminal as the frequency conversion control signal of pump 1
03-11 P.85	13	A1-C1 terminal as power frequency control signal of pump 1
03-12 P.129	15	SO2-SE terminal as power frequency control signal of pump 2
03-13 P.130	25	A2-C2 terminal as power frequency control signal of pump 3
03-42 P.568	27	A10-C1 terminal as power frequency control signal of pump 4
03-43 P.569	29	A11-C1 terminal as power frequency control signal of pump 5
03-44 P.570	31	A12-C2 terminal as power frequency control signal of pump 6
03-45 P.571	33	A13-C2 terminal as power frequency control signal of pump 7
08-00 P.170	1	The PID function is enabled. The selected target pressure is set by 08-03 (P.225), and the feedback comes from the 2-5 input.
08-03 P.225	40.0%	Target pressure is set to 40.0%
16-00 P.1000	1	Normal water supply mode
16-01 P.1001	1	Pump 1 is a variable frequency pump
16-02 P.1002	2	Pump 2 is a power frequency pump
16-03 P.1003	2	Pump 3 is a power frequency pump
16-04 P.1004	2	Pump 4 is a power frequency pump
16-05 P.1005	2	Pump 5 is a power frequency pump
16-06 P.1006	2	Pump 6 is a power frequency pump
16-07 P.1007	2	Pump 7 is a power frequency pump
16-21 P.1021	24.0h	Power frequency pump performs a timing switching operation at 24.0 hours

Pump increase and decrease pump parameters	Factory default	Add pump and reduce pump parameters using factory values

◆ Work description

Pump

After starting up, the inverter drives the current variable frequency pump to run at a variable frequency. There is only one variable frequency pump in this system, so all pumps are operated by industrial frequency pumps. According to the order of adding the power frequency pump, the pump with the small number is added first, then the pump with the large number is added. Therefore, the order of the first round of adding the pump to the system is pump 2 → pump 3 → pump 4 → pump 5 → Pump 6 → Pump 7.

Pump reduction

The order of pumping is as described above. The order of pump reduction is the longest continuous running time first. Therefore, the order of pump reduction according to the above pumping condition is pump 2 → pump 3 → pump 4 → pump 5 → Pump 6 → Pump 7.

Power frequency pump rotation

If the currently running power frequency pump is No. 2 pump, the cycle time is up, the system will stop No. 2 pump and start No. 3 pump. When the cycle time comes again, pump 3 will be stopped and pump 4 will be started, and so on.

If the currently running power frequency pumps are No. 2 pump, No. 3 pump and No. 6 pump, the continuous running time of No. 6 pump is the longest, and the system will stop No. 6 pump and start No. 7 pump when the rotation time is reached.

Pump X fails

(1) If there are currently 2 ~ 5 power frequency pumps in operation, M0 and M2 terminals will be closed, and pumps 2 and 4 will not stop running.

(2) If all industrial frequency pumps are stopped and the M0 and M2 terminals are closed, the system needs to be pumped when the water pressure is insufficient. The pumping sequence at this time is pump 3 → pump 5 → pump 6 → Pumps, No. 2 and No. 4 pumps will no longer participate in the operation of the system, and will always keep the contactor stopped and stopped.

All pumps fail

All the pumps of the current system are running. If the HDI terminal is ON, the inverter will stop output immediately. The inverter pump 1 will stop freely, but the inverter-controlled contactor of pump 1 will always be closed. On, the power frequency pump stops freely.

Example 3: 2 variable frequency pumps + 2 industrial frequency pumps + sleep pump + sewage pump

The system consists of 2 variable frequency pumps + 2 industrial frequency pumps + dormant pumps to achieve constant pressure water supply, and the sewage pumps control the water level of the sewage pond. The target pressure is set by 08-03 (P.225), and the feedback comes from the voltage signal between the input 2-5 terminals.

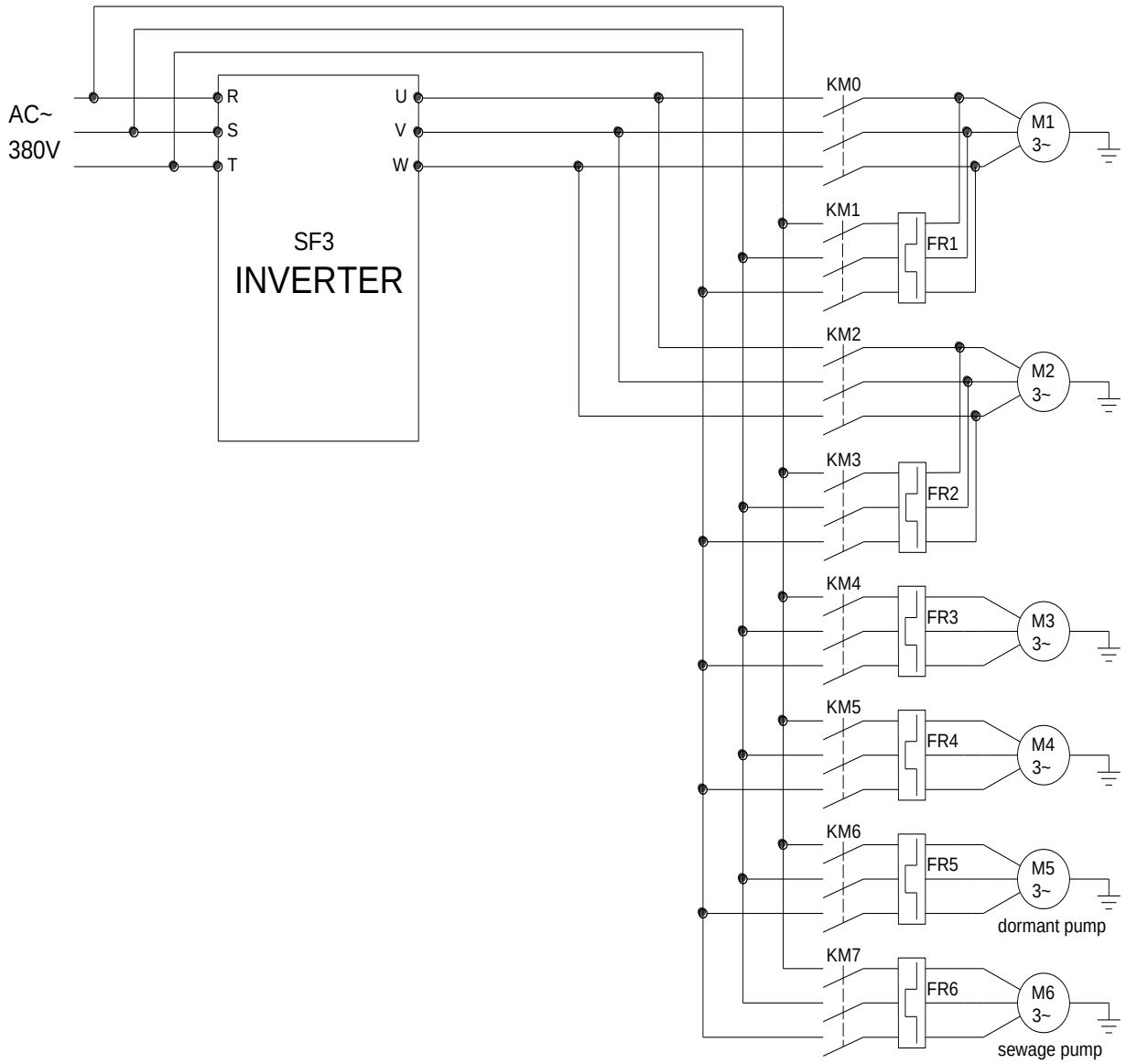

◆ Parameter settings

Parameter	Set value	Description
02-00 P.500	4	2-5 input as PID feedback source
03-03 P.80	79	M0 terminal as pump 1 failure control
03-04 P.81	80	M1 terminal as pump 2 failure control

03-05 P.82	81	M2 terminal as pump 3 failure control
03-06 P.126	82	M3 terminal as pump 4 failure control
03-07 P.127	86	M4 terminal as all pump failure control
03-08 P.128	90	The M5 terminal is used as the upper limit signal input of the water tank.
03-09 P.550	91	HDI terminal as the lower limit signal input of the water tank.
03-10 P.40	12	SO1-SE terminal as the frequency conversion control signal of pump 1.
03-11 P.85	13	A1-C1 terminal as power frequency control signal of pump 1.
03-12 P.129	14	SO2-SE terminal as the frequency conversion control signal of pump 2.
03-13 P.130	15	A2-C2 terminal as power frequency control signal of pump 2.
03-42 P.568	25	A10-C1 terminal as power frequency control signal of pump 3.
03-43 P.569	27	A11-C1 terminal as power frequency control signal of pump 4.
03-44 P.570	39	A12-C2 terminal as control signal of sleep pump.
03-45 P.571	40	A13-C2 terminal as control signal of sewage pump.
08-00 P.170	1	The PID function is enabled. The selected target pressure is set by 08-03 (P.225), and the feedback comes from the 2-5 input.
08-03 P.225	40.0%	Target pressure is set to 40.0%.
16-00 P.1000	1	Normal water supply mode
16-01 P.1001	1	Pump 1 is a variable frequency pump
16-02 P.1002	1	Pump 2 is a variable frequency pump
16-03 P.1003	2	Pump 3 is a variable frequency pump
16-04 P.1004	2	Pump 4 is a variable frequency pump
16-20 P.1020	12.0h	Frequency-controlled pump performs timing switching once every 12.0 hours
16-21 P.1021	24.0h	Power frequency pump performs a timing switching operation at 24.0 hours
16-22 P.1022	1	Hibernate
Sleep parameters	Factory default	Hibernation-related parameters use factory values

Pump increase and decrease pump parameters	Factory default	Add pump and reduce pump parameters using factory values

◆ Work description

Pump

After power-on, the inverter drives No. 1 pump to run in frequency. The order of adding pumps is to add the variable frequency pump first and then process the frequency pump. In the power frequency pump, add the small numbered pump and then the large numbered pump. The pump sequence is No. 2 pump → No. 3 pump → No. 4 pump. After adding the frequency conversion control of the current system of No. 2 pump, the frequency conversion pump is No. 2 pump, and No. 1 pump has been switched to power frequency control.

Pump reduction

The pumping sequence is as described above. The sequence of pump reduction is the longest continuous running time. The frequency conversion pump of the current frequency conversion control has been changed to the No. 2 pump. Therefore, the order of pump reduction according to the above pumping condition is 1. No. 3 pump → No. 4 pump.

Power frequency pump rotation

If the currently running power frequency pump is No. 3 pump, the cycle time is up, the system will stop No. 3 pump and start No. 4 pump. When the cycle time comes again, stop pump 4 and start pump 3, and so on.

Variable frequency pump rotation

If the currently running variable frequency pump is only pump number 2, the rotation time is up:

(1) The system will disconnect the frequency converter control contactor of No. 2 pump and stop No. 2 pump;

(2) Close the frequency-converting control contactor of the No. 1 pump after the brake delay time is 16-18;

(3) After the closing delay of 16-19, the No. 1 variable frequency pump accelerates to the set frequency of 16-16 under the drive of the inverter, and then resumes PID operation.

Pump X fails

(1) If all pumps are running and the frequency-converted pump is No. 2 pump, M0 and M2 terminals are closed, and No. 1 and No. 3 pumps will not stop running.

(2) If pumps No. 1 and No. 3 to No. 4 are stopped, contactors are all disconnected, and M0 and M2 terminals are closed. At this time, if the water pressure is insufficient, the system starts to add pumps. Pumps, No. 1 and No. 3 pumps will no longer participate in the operation of the system, and will always keep the contactor stopped and stopped.

All pumps fail

All pumps in the current system are running. If the M4 terminal is ON, the inverter will stop output immediately. The inverter-controlled inverter pump will coast to stop freely. However, the inverter-controlled contactor of this inverter pump is always on. The generator is immediately disconnected, and the power-frequency controlled pumps (not all power-frequency controlled pumps are not power-frequency pumps but also include variable-frequency pumps under power-frequency control) and immediately stop freely.

Dormant

The current water pressure is sufficient. Only one variable frequency pump is running in the system. After the pump reduction condition is met, the system enters the dormant state. The variable frequency pump stops running but the variable frequency control contactor is still in the pull-in state. The A12-C2 output signal drives the dormant pump contactor. Suction, the dormant pump starts running.

Insufficient water pressure, feedback pressure <(target pressure-sleep wake pressure tolerance value), and after 16-24 (P.1024), sleep wake up, A12-C2 stops output, stops the sleep pump, and starts the variable frequency pump to 01 The time of -06 (P.7) accelerates to the pumping frequency of 16-16 (P.1016), and the system exits the sleep state.

Blowdown

When the M5 terminal is ON, it indicates that the current level of the sewage tank is already at the upper limit, and the A13-C2 output signal drives the sewage pump to run to discharge sewage.

When M5 is OFF and HDI terminal is ON, A13-C2 stop signal output stops the sewage pump.

6. INSPECTION AND MAINTENANCE

6.1 Inspection item

6.1.1 Daily inspection item

- Inverter is mainly composed of semiconductor components. In order to prevent faults caused by influence of application environment such as temperature, humidity, dust and vibration, or aging and service life of used parts, daily inspections must be carried out.

  1. Whether the surrounding environment for installation is normal or not (temperature, humidity, dust density around the inverter).
  2. Whether the power supply voltage is normal or not (whether the three-phase voltage between terminals R/L1, S/L2 and T/L3 is normal).
  3. Whether the wirings are firm or not (whether the external wirings of the main circuit terminal and the control board terminal are firm).
  4. Whether the cooling system is normal or not (whether there is abnormal sound at the fan operation and whether the connecting wire is firm).
  5. Whether the indicator light is normal or not (such as LED indicator light of control panel, LED indicator light of keypad and LED indicator light of keypad display screen).
  6. Whether the motor is running as expected or not.
  7. Whether there is abnormal vibration, sound or smell at the motor operation.
  8. Whether there is liquid leakage in the filter capacitor on the capacitor plate.

Caution

Pay attention to safety during inspection !

6.1.2 Periodical inspection items

- Inspect the places that can be inspected only when the operation is stopped and inspect the specific places on a regular basis.

  1. Inspect whether the connectors and connecting wires are normal (inspect whether the connectors and connecting wires between the main circuit board and the control board are firm or damaged).
  2. Inspect whether there is overheating on the components of main circuit board and control board.
  3. Inspect whether there is liquid leakage in the electrolytic capacitors on the main circuit board and control board.
  4. Inspect IGBT module on main circuit board.
  5. Make sure to clean the dust and sundries on the circuit board.
  6. Check the insulation resistance.
  7. Inspect the cooling system for abnormalities (whether the fan connection line is firm or not, and make sure to clean the air filter/duct).
  8. Inspect whether the fixed device is firm or not and tighten the fixing screw.
  9. Inspect whether the external wires and terminal are damaged or not.

Caution

Pay attention to safety during inspection !

6.1.3 Checking the converter and inverter modules

- During the detection, first remove the external wiring of the main circuit terminals (R/L1, S/L2, T/L3, U/T1, V/T2, W/T3) and measure with the ohm-position of the three-purpose ammeter.

	Positive voltage terminal	Negative voltage terminal	Normal condition		Positive voltage terminal	Negative voltage terminal	Normal condition
Terminal symbol	R/L1	+/P	Conductive	Terminal symbol	U/T1	+/P	Conductive
	S/L2	+/P	**Conductive**		V/T2	+/P	Conductive
	T/L3	+/P	**Conductive**		W/T3	+/P	Conductive
	+/P	R/L1	Non-conductive		+/P	U/T1	Non-conductive
	+/P	S/L2	Non-conductive		+/P	V/T2	Non-conductive
	+/P	T/L3	Non-conductive		+/P	W/T3	Non-conductive
	R/L1	-/N	Non-conductive		U/T1	-/N	Non-conductive
	S/L2	-/N	Non-conductive		V/T2	-/N	Non-conductive
	T/L3	-/N	Non-conductive		W/T3	-/N	Non-conductive
	-/N	R/L1	**Conductive**		-/N	U/T1	Conductive
	-/N	S/L2	**Conductive**		-/N	V/T2	Conductive
	-/N	T/L3	**Conductive**		-/N	W/T3	Conductive

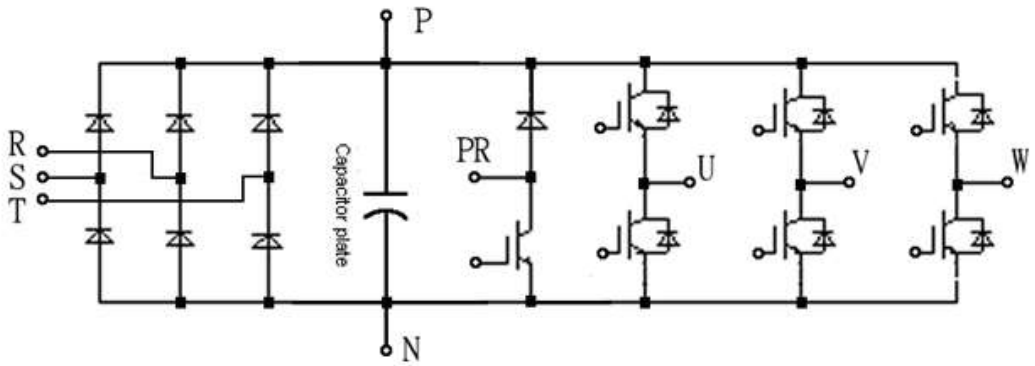

Note: The above diagram takes Frame A as an example.

6.1.4 Cleaning

- The inverter should always be kept running in a clean state.
  - Remove dust and sundries from fan blades, fan covers, and radiators by soft brush, so as to maintain good heat dissipation of the inverter.
  - After soaking soft cloth in neutral detergent, gently wipe off the dirty parts of the shell.

Note: 1. Do not use solvent (such as acetone, benzene, toluene and alcohol) to wipe the shell, which will cause the paint on the inverter surface to fall off.
2. Do not wipe the display parts of the keypad (PU301, PU301C) with chemicals such as detergents or alcohol.

6.1.5 Replacement of parts

- Inverter is composed of many electronic components such as semiconductor components.
- Due to the composition or physical characteristics, the following components will be aged within a certain period of time, thus reducing the inverter performance and even causing faults. Therefore, it is necessary to replace them on a regular basis.
- The lifetime detection function can be used as a reference for replacing parts.

Part name	Reference years for replacement	Description
Cooling fan	2 years	Within the specification value, the service life of the cooling fan bearing is about 10,000~35,000 hours. If it is operated 24 hours a day, it needs to be replaced about every two years.
Filter capacitor	5 years	Filter capacitors is electrolytic capacitors and will deteriorate after long-term use. The degree of deterioration depends on the environmental conditions. It is usually replaced about every 5 years.
Relays	---	If the relay has poor contact, please replace it immediately.

Note: 1. Please contact our company when replacing parts.
2. Please refer to section 3.10 of this manual for replacing the cooling fan.

6.2 Measurement of main circuit voltages, currents and powers

6.2.1 Selection of instruments for measurement

- The voltage and current at the input and output terminals of the inverter contain harmonics, so there will be differences in measurement data due to the differences in measuring instruments and measuring circuits. When using normal power frequency for measurement, please use the following measuring instruments.

	Voltage (v)	Current (A)	Power (kW)
Input side (R/L1, S/L2, T/L3)	Moving-iron meter	Moving-iron meter	Electrodynamic meter
DC side (+/P, -/N)	Moving-coil meter	---	---
Output side (U/T1, V/T2, W/T3)	Rectifier meter	Moving-iron meter	Electrodynamic meter

Note: 1. Please pay attention to the measuring range and polarity of the meter;
2. Please pay attention to personal and property safety.

6.2.2 Measurement of voltages

- The input terminal of inverter
  The input terminal voltage is sine wave with very small distortion coefficient, so it can be used by common AC measuring instruments and has good measuring accuracy.

- The output terminal of inverter
  The output terminal is a PWM controlled rectangular wave voltage, so a rectifying voltmeter must be used in this case.
  The value indicated by the pointer multimeter is larger than the actual value, so it cannot be used to measure the output terminal voltage.
  The indication value of the moving-iron meter includes effective values including harmonics, so it will show a value larger than the basic wave.
  Since the monitor value of the keypad is monitoring the voltage controlled by the inverter and displaying the correct value, it is recommended to use the monitoring (or analog output) of the keypad.

6.2.3 Measurement of currents

- The input and output terminals of the inverter can be used with moving-iron meters. However, if the carrier frequency exceeds 5kHz, the overcurrent loss caused by the metal parts inside the measuring meters will become larger, which may burn the meters. Please do not use it on this case. At this time, please use an approximate effective value measuring meters.

- The current at the input terminal of inverter is easy to be unbalanced, so it is recommended to measure the values of 3 phases at the same time. Only 1 phase or 2 phases cannot detect the correct value. In addition, the unbalance rate of each phase of the output terminal current must be controlled within 10%.

- If using clip-on ammeter, effective value measurement method must be applied. The clip-on ammeter of the average measurement mode has a large error, which displays a much smaller value than the actual value. Even if the output frequency changes, the monitor value of the keypad will display the correct value, so it is recommended to use the monitoring (or analog output) of the keypad.

6.2.4 Measurement of power

- Apply digital power meters at the input and output terminals of the inverter simultaneously, or apply electrodynamic meters at the input and output terminals of the inverter simultaneously. Then, measure the power by the 2-power measurement method or the 3-power measurement method. However, the input terminal current is easily to be unbalanced, so it is recommended to use 3-power measurement method for measurement.

6.2.5 Measurement of frequency

- The default setting of HDO terminal is FM function, which will output pulse trains proportional to output frequency between HDO-SD. The pulse trains output can be counted by a frequency counter, or a multimeter (moving-coil voltmeter) can be used to read the average value of the output voltage of the pulse trains.
- Please refer to section 5.3.9 of this manual.

6.2.6 Measurement of insulation resistance

- Insulation resistance of the inverter

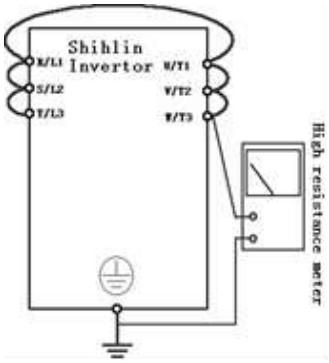

1. Before measuring the insulation resistance of the inverter, please remove the “wiring on all main circuit terminals” and “control board” and complete the wiring shown in the right diagram.
2. Insulation resistance can only be measured on the main circuit. It is forbidden to detect the terminals on the control board with a megger.
3. Insulation resistance value should be above 5MΩ

Note: Please use DC 500V megohmmeter.

- Insulation resistance of the motor

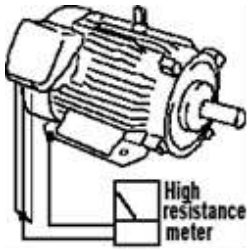

1. Before measuring the insulation resistance of the motor, please remove the motor and complete the wiring shown in the right diagram.
2. Insulation resistance value should be above 5MΩ.

Note: Please select the appropriate megohmmeter.

6.2.7 Hi-pot test

- Please do not carry out hi-pot test. There are many semiconductor components in the inverter. If performing hi-pot test, the semiconductor may deteriorate.

7. APPENDIX

7.1 Appendix 1: Parameter table

7.1.1 P parameter number sequence

Parameter number	Parameter group	Parameter name	Setting range	Default	Reference page
P.0	01-10	Torque boost	5.5K/3.7KG~7.5K/5.5KG types: 0~30.0%	3.0%	95
			11K/7.5KG~55K/45KG types: 0~30.0%	2.0%	
			75K/55KG and types above: 0~30.0%	1.0%	
P.1	01-00	Upper limiting frequency	55K/45KG and types below: 0.00~01-02 (P.18)Hz	120.00Hz	91
			75K/55KG and types above: 0.00~01-02 (P.18)Hz	60.00Hz	
P.2	01-01	Lower limiting frequency	0~120.00Hz	0.00Hz	91
P.3	01-03	Base frequency	50Hz system setting: 0~650.00Hz	50.00Hz	92
			60Hz system setting: 0~650.00Hz	60.00Hz	
P.4	04-00	Speed 1 (high speed)	0~650.00Hz	60.00Hz	152
P.5	04-01	Speed 2 (medium speed)	0~650.00Hz	30.00Hz	152
P.6	04-02	Speed 3 (low speed)	0~650.00Hz	10.00Hz	152
P.7	01-06	Acceleration time	0~360.00s/0~3600.0s	20.00s	93
P.8	01-07	Deceleration time	5.5K/3.7KG~7.5/5.5KG types: 0~360.00s/ 0~ 3600.0s	10.00s	93
			11K/7.5KG and types above: 0~360.00s/0~3600.0s	30.00s	
P.9	06-00	Electronic thermal relay capacity	0~500.00A: Types below Frame G	According to type	169
			0~5000.0A: Frame G and types above		
P.10	10-00	DC brake operating frequency	0~120.00Hz	3.00Hz	228
P.11	10-01	DC brake operating time	0~60.0s	0.5s	225
P.12	10-02	DC brake operating voltage	0~30.0%: 7.5K/5.5KG and types below	4.0%	225
			0~30.0%: 11K/7.5KG ~ 55K/45KG type	2.0%	
			0~30.0%: 75K/55KG and types above	1.0%	
P.13	01-11	Starting frequency	0~60.00Hz	0.50Hz	96
P.14	01-12	Load pattern selection	0: Applicable to constant torque loads (conveyor belt, etc.,)	0	96
			1: Applicable to variable torque loads (fans and pumps, etc.)		
			2, 3: Applicable to ascending/descending loads		
			4: Multipoint V/F curve		
			5~13: Special two-point V/F curve		
			14: V/F complete detached mode		
			15: V/F semidetached mode		
P.15	01-13	JOG frequency	0~650.00Hz	5.00Hz	99
P.16	01-14	JOG acceleration/deceleration time	0~360.00s/0~3600.0s	0.50s	99
P.17	02-20	4-5 signal selection	0: Effective range of signal sampling is 4~20mA	0	119
			1: Effective range of signal sampling is 0~10V		
			2: Effective range of signal sampling is 0~5V		
P.18	01-02	High-speed upper limiting frequency	01-00 (P.1)~650.00Hz	120.00Hz	91
P.19	01-04	Base voltage	0~1000.0V	99999	92
			99999: Change according to the input voltage		

Appendix 1: Parameter table

Parameter number	Parameter group	Parameter name	Setting range	Default	Reference page
P.20	01-09	Acceleration/deceleration reference frequency	50Hz system setting: 1.00~650.00Hz	50.00Hz	93
			60Hz system setting: 1.00~650.00Hz	60.00Hz	
P.21	01-08	Acceleration/deceleration time increments	0: Time increment is 0.01s	0	93
			1: Time increment is 0.1s		
P.22	06-01	Stall prevention operation level	0~200.0%	120.0%	169
P.23	06-02	Level reduction correction factor	0~150.0%	99999	169
			99999: stall prevention level is set value of 06-01 (P.22)		
P.24	04-03	Speed 4	0~650.00Hz	99999	152
			99999: Invalid function		
P.25	04-04	Speed 5	The same as 04-03(P.24)	99999	152
P.26	04-05	Speed 6	The same as 04-03(P.24)	99999	152
P.27	04-06	Speed 7	The same as 04-03(P.24)	99999	152
P.28	01-15	Output frequency filter time	0~1000ms	0ms	100
P.29	01-05	Acceleration/deceleration curve selection	0: Linear acceleration/deceleration curve	0	93
			1: S pattern acceleration/deceleration curve 1		
			2: S pattern acceleration/deceleration curve 2		
			3: S pattern acceleration/deceleration curve 3		
P.30	06-05	Function selection of regenerative braking	0:The regenerative braking utilization rate is fixed at 3%, and the parameter 06-06(P.70) is invalid	0	171
			1: The usage rate of regenerative braking is the set value of 06-06(P.70)		
			2: Protection function of external brake unit (D frame and above)	2	
P.31	00-12	Soft-PWM carrier selection	0: None Soft-PWM operation	0	83
			1:When 00-11(P.72)< 5, Soft-PWM is valid (only apply to V/F control)		
P.32	07-02	COM1 serial communication baud rate	0: baud rate is 4800bps	1	190
			1: baud rate is 9600bps		
			2: baud rate is 19200bps		
			3: baud rate is 38400bps		
			4: baud rate is 57600bps		
			5: baud rate is 115200bps		
P.33	07-00	COM1 communication protocol selection	0: Modbus protocol	1	190
			1: Shihlin protocol		
			2: PLC protocol (Effective when using Shihlin built-in PLC)		
P.34	07-11	Communication EEPROM write-in selection	0: When writing parameters in communication mode, write in RAM and EEPROM	0	205
			1: When writing parameters through communication, only write into RAM		
P.35	00-19	Communication mode command source selection	0: In communication mode, start and frequency command is given by communication	0	85
			1: In communication mode, start and frequency command is given by external terminal		
P.36	07-01	COM1 inverter communication station number	0~254	0	190
P.37	00-08	Speed display	0: Display output frequency (not mechanical speed)	0.0	83
			0.1~5000.0		
			1~50000		
P.38	02-09	2-5 maximum operation frequency	50Hz system setting: 1.00~650.00Hz	60.00Hz	113
			60Hz system setting: 1.00~650.00Hz		

Parameter number	Parameter group	Parameter name	Setting range	Default	Reference page
P.39	02-21	4-5 maximum operation frequency	50Hz system setting: 1.00~650.00Hz	50.00Hz	119
			60Hz system setting: 1.00~650.00Hz	60.00Hz	
P.40	03-10	SO1-SE function selection	0: RUN (The inverter is running)	1	140
			1: SU (Output frequency arrival)		
			2: FU (output frequency detected)		
			3: OL (Overload alarm)		
			4: OMD (Zero current detected)		
			5: ALARM (Alarm detected)		
			6: PO1 (Signal detected in program running segment)		
			7: PO2 (Signal detected during program operation cycle)		
			8: PO3 (Pause signal detected during program operation)		
			9: BP (Power frequency conversion switching, frequency conversion output)		
			10: GP (Power frequency conversion switching, power frequency output)		
			11: (Zero current detected)		
			12：Pump 1 frequency conversion control		
			13：Pump 1 power frequency control		
			14：Pump 2 frequency conversion control		
			15：Pump 2 power frequency control		
			16: Reserve		
			17: RY (The inverter is ready for operation)		
			18: Maintenance alarm function detected		
			19: OL2 (Over torque alarm output)		
			20: Abnormal service life of capacitor		
			21~22: Reserve		
			23: Power off sign detected		
			24：Pump 3 frequency conversion control		
			25：Pump 3 power frequency control		
			26：Pump 4 frequency conversion control		
			27：Pump 4 power frequency control		
			28：Pump 5 frequency conversion control		
			29：Pump 5 power frequency control		
			30：Pump 6 frequency conversion control		
			31：Pump 6 power frequency control		
			32：Pump 7 frequency conversion control		
			33：Pump 7 power frequency control		
			34：Indication of dormant operation		
			35：Hydraulic overpressure indication		
			36：Underpressure indication of water pressure		
			37~38：reserved		
			39：Power frequency control of dormant pump(16-01(P.1001)~16-07(P.1007) have been set to sleep pump this function is invalid.)		
			40：Sewage pump power frequency control(16-01(P.1001)~16-07(P.1007) have been set to sleep pump this function is invalid.)		
			41：PID feedback line break (AEr) alarm		
			42：Fire mode indication		
			43：Fire mode bypass indication		

Parameter number	Parameter group	Parameter name	Setting range	Default	Reference page
P.41	03-20	Output frequency detection range	0~100.0%	10.0%	144
P.42	03-21	Forward rotation output frequency detected	0~650.00Hz	6.00Hz	144
P.43	03-22	Reverse rotation output frequency detection	0~650.00Hz 99999: the same as the setting of 03-21(P.42)	99999	144
P.44	01-22	Second acceleration time	0~360.00s/0~3600.0s 99999: Not selected	99999	101
P.45	01-23	Second deceleration time	0~360.00s/0~3600.0s 99999: Not selected	99999	101
P.46	01-24	Second torque boost	0~30.0% 99999: Not selected	99999	101
P.47	01-25	Second base frequency	0~650.00Hz 99999: Not selected	99999	101
P.48	07-03	COM1 data length	0: 8bit 1: 7bit	0	190
P.49	07-04	COM1 stop bit length	0: 1bit 1: 2bit	0	190
P.50	07-05	COM1 parity check selection	0: No parity check 1: Odd check 2: Even check	0	190
P.51	07-06	COM1 CR/LF selection	1: CR only 2 Both CR and LF are available	1	190
P.52	07-08	COM1 communication abnormal allowable times	0~10	1	190
P.53	07-09	COM1 communication interval allowed time	0~999.8s: Checking communication timeout with the set value 99999: No timeout check	99999	190
P.54	02-04	Function of terminal AM1 output	0: Output frequency, the frequency display reference 02-51 (P.55) is 100%. 1: Output current, the frequency display reference 02-52(P.56) is 100%. 2: Output DC bus voltage, OV level is 100% 3: Output inverter thermal rise cumulative rate, the NTC level is 100% 4: Output the electronic thermal rate of the inverter, the electronic thermal relay running (06-00(P.9)≠0) or the electronic thermal relay of the inverter's IGBT module running (06-00(P.9)=0) is 100%. 5: Target frequency, the frequency display reference 02-51(P.55) is 100%. 6: Fixed level output, voltage or current output level is set by 02-54(P.541). 7: Output voltage, inverter rated voltage is 100%. 8: Excitation current, the motor rated current is 100%. (Valid only when 00-21 (P.300) or 00-22 (P.370) is set to 3~6). 9: Output torque, two times motor rated torque is 100%.(Valid only when 00-21(P.300) or 00-22(P.370) is set o 3-6) 10: Output power, two times motor rated power is 100%. 11: The high-speed pulse input, 100.00KHz is 100%. 12: Motor operation speed, to display the level of 02-51(P.55) is 100%. 13: PLC analog output	0	111

Parameter number	Parameter group	Parameter name	Setting range	Default	Reference page
P.55	02-51	Frequency display reference at analog output	50Hz system setting: 0~650.00Hz	50.00H	126
			60Hz system setting: 0~650.00Hz	60.00H	
P.56	02-52	Currency monitoring reference at analog output	0~500.00A: Types below Frame G	According to type	126
			0~5000.0A: Frame G and types above		
P.57	10-09	Restart idling time	0~30.0s	99999	228
			99999: No restart function		
P.58	10-10	Restart rising time	0 ~ 60.0s： 7.5K/5.5KG (inclusive) and below types	5.0s	228
			0 ~ 60.0s： 11K/7.5KG ~ 55K/45KG types	10.0s	
			0 ~ 60.0s： 75K/55KG (inclusive) and above types	20.0s	
P.60	02-10	2-5 filter time	0~2000ms	30ms	113
P.61	10-11	Remote control function	X0: No remote control function	0	230
			X1: Remote control function, memorable frequency		
			X2: Remote control function, unmemorable frequency		
			X3: Remote control function, unmemorable frequency, STF/STR “turn off” will clear remote control set frequency		
			X4: Remote control function, frequency save in memory every 5s		
			1X: Frequency command range 01-01(P.2)~01-00(P.1), frequency commandvalue from RH,RM setting.		
P.62	03-23	Zero current detection level	0~200.0%	5.0%	145
			99999: Invalid function		
P.63	03-24	Zero current detected time	0~100.00s	0.50s	145
			99999: Invalid function		
P.64	02-45	AM1 output signal selection	0: Output 0-10V voltage across AM1-5	0	124
			1: Reserve		
			2: Output 0-20mA current across AM1-5		
			3: Output 4-20mA current across AM1-5		
P.65	10-12	Retry function selection	0: No retry function	0	234
			1: Overvoltage occurring, the inverter performs retry function		
			2: Overcurrent occurring, the inverter performs retry function		
			3: Overvoltage or overcurrent occurring, the inverter performs retry function		
			4: All alarms have retry function		
P.66	06-03	Stall prevention operation reduction starting frequency	50Hz system setting: 0~650.00Hz	50.00Hz	169
			60Hz system setting: 0~650.00Hz	60.00Hz	
P.67	10-13	Reset times at abnormal	0: No retry function	0	234
			1~10: If the continuous alarm exceeds the set value of 10-13 (P.67), the inverter will no longer perform the retry function		
P.68	10-14	Reset execution waiting	0~360.0s	1.0s	234
P.69	10-15	Alarm reset cumulative times	Read only	0	234
P.70	06-06	Special regenerative braking rate	0~100.0%	0.0%	171

Parameter number	Parameter group	Parameter name	Setting range	Default	Reference page
P.71	00-13	Idling braking/DC braking	0: Idling braking 1: DC braking	1	84
P.72	00-11	Carrier frequency	A/B frame: 1~15 kHz C/D frame: 1~10 kHz E/F frame: 1~9 kHz G/H frame: 1~4 kHz	2 kHz	83
P.73	02-08	2-5 signal selection	0: Effective range of signal sampling is 0~5V 1: Effective range of signal sampling is 0~10V 2: Effective range of signal sampling is 0~- 5V 3: Effective range of signal sampling is 0~-10V 4: Effective range of signal sampling is -5~+5V 5: Effective range of signal sampling is -10~+10V	1	113
P.74	02-43	HDO frequency multiplication coefficient	0: Select FM function as output function of terminal HDO 1~9000: Select square-wave pulse which is 02-43(P.74) times of running frequency as terminal output.	0	123
P.75	00-14	Stop function selection	0: Press STOP button to stop the motor in PU and H2 mode 1: Press STOP button to stop the motor in all mode	1	84
P.77	00-03	Selection of parameters write protection	0: Parameters can be written only when the motor stops 1: Parameters cannot be written 2: Parameters can also be written when the motor is running 3: Parameters cannot be read when in password protection	0	74
P.78	00-15	Forward/reverse rotation prevention selection	0: Forward rotation and reverse rotation are both permitted 1: Reverse rotation is prohibited (Sending reverse command refer to decelerate and stop the motor) 2: Forward rotation is prohibited (Sending forward command refer to decelerate and stop the motor)	0	85
P.79	00-16	Operation mode selection	0: PU mode, Jog mode and external mode are interchangeable 1: PU mode and Jog mode are interchangeable 2: External mode only 3: Communication mode only 4: Combined mode 1 5: Combined mode 2 6: Combined mode 3 7: Combined mode 4 8: Combined mode 5 99999: Second operation mode, run command is set by 00-18(P.109), target frequency is set by 00-17(P.97)	0	85
P.80	03-03	M0 function selection	The same as 03-00(P.83)	2	134
P.81	03-04	M1 function selection	The same as 03-00(P.83)	3	134
P.82	03-05	M2 function selection	The same as 03-00(P.83)	4	134

Parameter number	Parameter group	Parameter name	Setting range	Default	Reference page
P.83	03-00	STF function selection	0: STF (forward rotation of inverter)	0	134
			1: STR (reverse rotation of inverter)		
			2: RL (multi-speed low speed)		
			3: RM (multi-speed medium speed)		
			4: RH (multi-speed high speed)		
			5: AU (Analog terminals 4-5 is preferred)		
			6: OH External thermal relay action		
			7: MRS (Inverter output stops immediately)		
			8: RT (the second function of inverter)		
			9: EXT (external jog)		
			10: STF+EXJ		
			11: STR+EXJ		
			12: STF+RT		
			13: STR+RT		
			14: STF+RL		
			15: STR+RL		
			16: STF+RM		
			17: STR+RM		
			18: STF+RH		
			19: STR+RH		
			20: STF+RL+RM		
			21: STR+RL+RM		
			22: STF+RT+RL		
			23: STR+RT+RL		
			24: STF+RT+RM		
			25: STR+RT+RM		
			26: STF+RT+RL+RM		
			27: STR+RT+RL+RM		
			28: RUN (Forward rotation of motor)		
			29: STF/STR (cooperating with RUN signal, when STF/STR is “on”, the motor rotates reversely, while STF/STR is “off”, the motor rotates forward.)		
			30: RES (external Reset function)		
			31: STOP (cooperating with RUN signal, STF/STR terminals can be combined into three-wire function.)		
			32: REX (combine multi-speed into 16 segment speed)		
			33: PO (In the external mode, select the programmed operation mode.)		
			34: RES_E (The external Reset signal is only valid when an alarm occurs.)		
			35: MPO (Manual cycle function in external mode)		
			36: TRI (Triangular wave function)		
			37: GP_BP (Power frequency conversion switching function)		
			38: CS (Manually switch power frequency signals)		
			39: STF/STR +STOP (cooperating with RUN signal, when ON, the motor rotates reversely, while OFF, the motor stops and then rotates forward.)		
			40: P_MRS (Inverter output stops immediately, where MRS is the pulse signal input.)		
			41: PWM PWM set frequency (Note 1)		

Parameter number	Parameter group	Parameter name	Setting range	Default	Reference page
P.83	03-00	STF function selection	42: Reserve	0	134
			43: RUN_EN (enable digital input terminal operation)		
			44: PID_OFF enable digital input terminal turning off PID		
			45: The second mode		
			46~56: Reserve		
			57: High-speed pulse input function (Note 1)		
			58: Analog terminal 2-5 is preferred		
			59: Analog terminal 3-5 is preferred		
			60: Start and stop of PLC		
			61~64: Reserve		
			65: Pause of external acceleration and deceleration		
			66: External forced stop		
			67~71：reserved		
			72：Pump 1 manual soft start		
			73：Pump 2manual soft start		
			74：Pump 3 manual soft start		
			75：Pump 4 manual soft start		
			76：Pump 5 manual soft start		
			77：Pump 6 manual soft start		
			78：Pump 7 manual soft start		
			79：Pump 1 failure		
			80：Pump 2 failure		
			81：Pump 3 failure		
			82：Pump 4 failure		
			83：Pump 5 failure		
			84：Pump 6 failure		
			85：Pump 7failure		
			86：Failure of all pumps		
			87~89：reserved		
			90：Upper level of sump		
			91：Lower limit of sump water level		
			92：Fire mode command 1 (with run command)		
			93：Fire mode command 2 (without run command)		
			99999: This external terminal function is not selected.		
P.84	03-01	STR function selection	The same as 03-00(P.83)	1	134
P.85	03-11	A1-B1-C1 function selection	The same as 03-10(P.40)	5	140
P.86	03-02	RES function selection	The same as 03-00(P.83)	30	134
P.87	03-14	Multi-function digital input terminal that inputs positive and negative logic	0~1023	0	142
P.88	03-15	The positive and negative logic of the multi-function digital output terminal	0~4095	0	142
P.89	13-00	Slip compensation coefficient	0~10	0	259
P.90	00-00	Inverter model	Read only	Read only	74
P.91	01-16	Frequency jump 1A	0~650.00Hz	99999	100
			99999: Invalid		
P.92	01-17	Frequency jump 1B	0~650.00Hz	99999	100
			99999: Invalid		

Parameter number	Parameter group	Parameter name	Setting range	Default	Reference page
P.93	01-18	Frequency jump 2A	0~650.00Hz 99999: Invalid	99999	100
P.94	01-19	Frequency jump 2B	0~650.00Hz 99999: Invalid	99999	100
P.95	01-20	Frequency jump 3A	0~650.00Hz 99999: Invalid	99999	100
P.96	01-21	Frequency jump 3B	0~650.00Hz 99999: Invalid	99999	100
P.97	00-17	Second target frequency selection	0: Frequency set by keypad 1: Frequency set by communication RS485 2: Frequency set by analog signal 3: Frequency set by communication card (optional) 4: Reserve 5: Frequency set by HDI pulse	0	85
P.98	01-26	Middle frequency 1	0~650.00Hz	3.00Hz	102
P.99	01-27	Middle voltage 1	0~100.0%	10.0%	102
P.100	04-15	Selection of minute or second	0: select minute as the time increment 1: select second as the time increment	1	154
P.101	04-27	Running time of programmed operation mode speed 1	0~6000.0s	0.0s	154
P.102	04-28	Running time of programmed operation mode speed 2	0~6000.0s	0.0s	154
P.103	04-29	Running time of programmed operation mode speed 3	0~6000.0s	0.0s	154
P.104	04-30	Running time of programmed operation mode speed 4	0~6000.0s	0.0s	154
P.105	04-31	Running time of programmed operation mode speed 5	0~6000.0s	0.0s	154
P.106	04-32	Running time of programmed operation mode speed 6	0~6000.0s	0.0s	154
P.107	04-33	Running time of programmed operation mode speed 7	0~6000.0s	0.0s	154
P.108	04-34	Running time of programmed operation mode speed 8	0~6000.0s	0.0s	155
P.109	00-18	Second start signal selection	0: Start signal given by keypad 1: Start signal given by digital input terminal 2: Start signal given by communication RS485 3: Start signal given by communication card (optional)	0	85
P.110	00-06	Keypad monitoring selection	X0: When the inverter starts, keypad enters the monitoring mode automatically, screen displays the current output frequency. X1: When the inverter starts, keypad enters the monitoring mode automatically, screen displays the current stable output frequency. X2: When inverter starts, keypad enters monitor mode automatically, screen displays current pressure and feedback pressure of the constant pressure system in percentage X5：When inverter starts, keypad enters monitor mode automatically, screen displays current pressure and feedback pressure of the constant pressure system (valid with PU301C)	1	80

Appendix 1: Parameter table

Parameter number	Parameter group	Parameter name	Setting range	Default	Reference page
P.110	00-06	Keypad monitoring selection	0X: The boot screen is monitor output frequency mode 1X: The boot screen is target frequency setting mode 2X: The boot screen is monitor output current mode 3X: The boot screen is monitor output voltage mode	1	80
P.111	04-35	Acceleration and deceleration time of programmed operation mode speed 1	0~600.00s/0~6000.0s	0.00s	155
P.112	04-36	Acceleration and deceleration time of programmed operation mode speed 2	0~600.00s/0~6000.0s	0.00s	155
P.113	04-37	Acceleration and deceleration time of programmed operation mode speed 3	0~600.00s/0~6000.0s	0.00s	155
P.114	04-38	Acceleration and deceleration time of programmed operation mode speed 4	0~600.00s/0~6000.0s	0.00s	155
P.115	04-39	Acceleration and deceleration time of programmed operation mode speed 5	0~600.00s/0~6000.0s	0.00s	155
P.116	04-40	Acceleration and deceleration time of programmed operation mode speed 6	0~600.00s/0~6000.0s	0.00s	155
P.117	04-41	Acceleration and deceleration time of programmed operation mode speed 7	0~600.00s/0~6000.0s	0.00s	155
P.118	04-42	Acceleration and deceleration time of programmed operation mode speed 8	0~600.00s/0~6000.0s	0.00s	155
P.119	10-16	The dead time of positive and reverse rotation	0~3000.0s	0.0s	235
P.120	03-16	Delay time of output signal	0~3600.0s	0.0s	143
P.121	04-16	Running direction of each speed segment	0~255	0	154
P.122	04-17	Cyclical selection	0: No cycle 1~8: Start cycle from the set segment	0	154
P.123	04-18	Selection of acceleration and deceleration time	0: The acceleration time is determined by the set value of 01-06 (P.7) and deceleration time is determined by the set value of 01-07 (P.8) 1: the acceleration time and deceleration time are both determined by 04-35 (P.111)~04-42 (P.118)	0	154
P.125	00-26	Expansion card type	Read only	Read only	88
P.126	03-06	M3 function selection	The same as 03-00(P.83)	5	136
P.127	03-07	M4 function selection	The same as 03-00(P.83)	8	136
P.128	03-08	M5 function selection	The same as 03-00(P.83)	7	136

Parameter number	Parameter group	Parameter name	Setting range	Default	Reference page
P.129	03-12	SO2-SE function selection	The same as 03-10(P.40)	2	140
P.130	03-13	A2-B2-C2 function selection	The same as 03-10(P.40)	0	140
P.131	04-19	Programmed operation mode speed 1	0~650.00Hz	0.00Hz	154
P.132	04-20	Programmed operation mode speed 2	0~650.00Hz	0.00Hz	154
P.133	04-21	Programmed operation mode speed 3	0~650.00Hz	0.00Hz	154
P.134	04-22	Programmed operation mode speed 4	0~650.00Hz	0.00Hz	154
P.135	04-23	Programmed operation mode speed 5	0~650.00Hz	0.00Hz	154
P.136	04-24	Programmed operation mode speed 6	0~650.00Hz	0.00Hz	154
P.137	04-25	Programmed operation mode speed 7	0~650.00Hz	0.00Hz	154
P.138	04-26	Programmed operation mode speed 8	0~650.00Hz	0.00Hz	154
P.139	02-11	Bias rate of 2-5 voltage signal	-100.0%~100.0%	0.0%	113
P.142	04-07	Speed 8	The same as 04-03(P.24)	99999	152
P.143	04-08	Speed 9	The same as 04-03(P.24)	99999	152
P.144	04-09	Speed 10	The same as 04-03(P.24)	99999	152
P.145	04-10	Speed 11	The same as 04-03(P.24)	99999	152
P.146	04-11	Speed 12	The same as 04-03(P.24)	99999	152
P.147	04-12	Speed 13	The same as 04-03(P.24)	99999	152
P.148	04-13	Speed 14	The same as 04-03(P.24)	99999	152
P.149	04-14	Speed 15	The same as 04-03(P.24)	99999	152
P.150	10-08	Start mode selection	XX0: No frequency search XX1: Direct frequency search XX2: Voltage reduction mode X0X: Power on once X1X: Every start X2X: Sudden stop and restart only 0XX: No rotation direction detection 1XX: Rotation direction detection 2XX: 00-15 (P.78) =0, rotation direction detection; 00-15 (P.78) =1/2, no rotation direction detection	0	228
P.151	10-03	Zero-speed control function selection	0: No output at zero-speed 1: Perform DC voltage brake at VF control (00-21(P.300)/00-22(P.370)=0)	0	226
P.152	10-04	Voltage at zero-speed control	0～30.0%: 7.5K/5.5KG and below types	4.0%	226
			0～30.0%: 11K/7.5KG～55K/45KG types	2.0%	
			0～30.0%: 75K/55KG and above types	1.0%	
P.153	07-10	COM1 communication error handling	0: Alarm and idling and stopping; 1: No alarm and continuing to operation	1	190
P.154	07-07	COM1 Modbus communication format	0: 1,7,N,2 (Modbus, ASCII) 1: 1,7,E,1 (Modbus, ASCII) 2: 1,7,O,1 (Modbus, ASCII) 3: 1,8,N,2 (Modbus, RTU) 4: 1,8,E,1 (Modbus, RTU) 5: 1,8,O,1 (Modbus, RTU)	4	190
P.155	06-08	Over torque detection level	0~200.0%	0.0%	173
P.156	06-09	Over torque detection time	0.1~60.0s	1.0s	173

Appendix 1: Parameter table

Parameter number	Parameter group	Parameter name	Setting range	Default	Reference page
P.157	03-17	Filtering time of the digital input terminal	0~2000ms	4ms	143
P.158	03-18	Enable digital input terminal power-on	0: Not enable digital input terminal power-on 1: Enable digital input terminal power-on	0	144
P.159	10-17	Energy saving control	0: Normal operation mode 1: Energy-saving operation mode	0	235
P.160	06-11	Stall level when restart	0~150.0%	100.0%	173
P.161	00-07	Multi-function display	0: Output AC voltage (V) 1: Inverter voltage between (+/P) and (-/N) terminals (V) 2: Temperature rising accumulation rate of inverter (%) 3: Target pressure of the constant pressure system (%) 4: Feedback pressure of the constant pressure system (%) 5: Operation frequency (Hz) 6: Electronic thermal accumulation rate (%) 7: Signal value (V) of 2-5 simulating input terminals 8: Signal value (mA) of 4-5 simulating input terminals (mA/V) 9: Output power (kW) 10: Current rotation speed of the motor (Hz) 11: Positive and reverse rotation signal. 1 represents positive rotation, 2 represents reverse rotation, and 0 represents stopping state 12: NTC temperature (℃) 13: Thermal accumulation rate of motor (%) 14: Reserve 15: Input frequency of terminal HDI (kHz) 16~ 17: Reserve 18: Output torque of inverter (%) (Valid only when 00-21 (P. 300) or 00-22 (P. 370) is set to 3 ~ 6) 19: Digital input terminal signal state 20: Digital output terminal signal state 21: Actual working carrier frequency 22: Signal value (mA) of 3-5 analog input terminals (mA/V) 23: Reserve 24: Current target frequency 25: PTC input percentage 26: Target and feedback pressure of the constant pressure system 27: Current rotation speed of the motor (rpm) 28: Power factor 29: Power accumulated value KWH	0	81
P.162	01-28	Middle frequency 2	0~650.00Hz 99999: Not selected	99999	102
P.163	01-29	Middle voltage 2	0~100.0%	0.0%	102
P.164	01-30	Middle frequency 3	0~650.00Hz 99999: Not selected	99999	102
P.165	01-31	Middle voltage 3	0~100.0%	0.0%	102
P.166	01-32	Middle frequency 4	0~650.00Hz 99999: Not selected	99999	102

Parameter number	Parameter group	Parameter name	Setting range	Default	Reference page
P.167	01-33	Middle voltage 4	0~100.0%	0.0%	102
P.168	01-34	Middle frequency 5	0~650.00Hz 99999: Not selected	99999	102
P.169	01-35	Middle voltage 5	0~100.0%	0.0%	102
P.170	08-00	PID function selection	0: No PID function selected 0X: Setting target value of parameter 08-03 (P.225) 1X: Terminal 2-5 input as the target source 2X: Terminal 4-5 input as the target source 3X: Terminal 3-5 input as the target source 4X: Terminal HDI input as the target source X1: Terminal 2-5 input as feedback source X2: Terminal 4-5 input as feedback source X3: Terminal 3-5 input as feedback source	0	211
P.171	08-01	PID feedback control mode	0: PID negative action 1: PID positive action	0	211
P.172	08-04	Proportional gain	0.1%~1000.0%	20.0%	212
P.173	08-05	Integral time	0~60.00s	1.00s	212
P.174	08-06	Differential time	0~10000ms	0ms	212
P.175	08-07	Abnormal deviation	0~100.0%	0.0%	212
P.176	08-08	Abnormal duration time	0~600.0s	30.0s	212
P.177	08-09	Abnormal processing mode	0: Stop freely 1: Slow down to stop 2: Alarm and continue operation	0	212
P.178	08-10	Sleep detection deviation	0~100.0%	0.0%	212
P.179	08-11	Sleep detection duration time	0~255.0s	1.0s	212
P.180	08-12	Wake-up level	0~100.0%	90.0%	212
P.181	08-13	Stop level	0~120.00Hz	40.00Hz	212
P.182	08-14	Upper integral limit	0~200.0%	100.0%	212
P.183	08-15	Deceleration step length when stable	0~10.00Hz	0.50Hz	212
P.184	02-24	4-5 disconnection selection	0: No disconnection selection 1: Decelerate to 0Hz, digital output terminal will set off alarm. 2: Inverter will stop immediately, and keypad will display “AEr” alarm. 3: Inverter will run continuously according to the frequency command before disconnection. Digital output terminal will set off alarm.	0	119
P.185	02-06	Proportion linkage gain	0~100%	0%	111
P.186	00-23	Duty types selection	0: Normal Duty (ND), on fan and pump duty type. 1: Heavy Duty (HD), apply to other duties.	0	87
P.187	02-59	FM calibration parameter	0~9998	450	127
P.188	00-01	Inverter program version	Read only	Read only	74
P.189	00-24	50Hz/60Hz switch selection	0: 60Hz system default value for related parameters. 1: 50Hz system default value for related parameters.	0 1	87
P.190	02-47	AM1 output bias	0~150.00%	0.00%	124
P.191	02-46	AM1 output gain	0~150.00%	100.00%	124

Appendix 1: Parameter table

Parameter number	Parameter group	Parameter name	Setting range	Default	Reference page
P.192	02-12	Minimum positive input voltage of 2-5	0~10.00V	0.00V	113
P.193	02-13	Maximum positive input voltage of 2-5	0~10.00V	10.00V	113
P.194	02-14	Percentage correspond to minimum positive input voltage of 2-5	-100.0%~100.0%	0.0%	113
P.195	02-15	Percentage correspond to maximum positive input voltage of 2-5	-100.0%~100.0%	100.0%	113
P.196	02-27	Percentage correspond to minimum input current/voltage of 4-5	-100.0~100.0%	0.0%	119
P.197	02-28	Percentage correspond to maximum input current/voltage of 4-5	-100.0~100.0%	100.0%	119
P.198	02-25	Minimum input current/voltage of 4-5	0~20.00mA	4.00mA	119
P.199	02-26	Maximum input current/voltage of 4-5	0~20.00mA	20.00mA	119
P.219	01-40	Remote function acc/dec time selection	0: Use default acc/dec time (same as regular mode) 1: Use second acc/dec time	0	105
P.220	06-04	Selection of acceleration and deceleration time when current stalling	0: According to the current acceleration and deceleration time 1: According to the first acceleration and deceleration time 2: According to the second acceleration and deceleration time 3: Automatically calculate the best acceleration and deceleration time	3	169
P.221	08-16	Lower limit of pressure sampling value	0~65535	0	212
P.222	08-17	Upper limit pressure sampling value	0~65535	0	212
P.223	08-18	Analog feedback signal bias	0~100.0%	0.0%	212
P.224	08-19	Analog feedback signal gain	0~100.0%	100.0%	212
P.225	08-03	PID target value panel reference	0~08-43(P.251)	20.0%	212
P.229	10-18	Dwell function selection	0: No function 1: Backlash compensation function 2: Acceleration and deceleration interrupt waiting function	0	236
P.230	10-19	Dwell frequency at acceleration	0~650.00Hz	1.00Hz	236
P.231	10-20	Dwell time at acceleration	0~360.0s	0.5s	236
P.232	10-21	Dwell frequency at deceleration	0~650.00Hz	1.00Hz	236
P.233	10-22	Dwell time at deceleration	0~360.0s	0.5s	236
P.234	10-23	Triangular wave function selection	0: No function 1: Connecting the external TRI signal, the triangular wave function is valid 2: The triangular wave function is valid at any time	0	238
P.235	10-24	Maximum amplitude	0~25.0%	10.0%	238
P.236	10-25	Amplitude compensation at deceleration	0~50.0%	10.0%	238

Parameter number	Parameter group	Parameter name	Setting range	Default	Reference page
P.237	10-26	Amplitude compensation during acceleration	0~50.0%	10.0%	238
P.238	10-27	Amplitude acceleration time	0~360.00s/0~3600.0s	10.00s	238
P.239	10-28	Amplitude deceleration time	0~360.00s/0~3600.0s	10.00s	238
P.240	02-07	Auxiliary frequency selection	0: No auxiliary frequency function is available.	0	112
			1: operation frequency = basic frequency + auxiliary frequency (given by 2-5 terminal)		
			2: operation frequency = basic frequency + auxiliary frequency (given by 4-5 terminal)		
			3: operation frequency = basic frequency - auxiliary frequency (given by 2-5 terminal)		
			4: operation frequency = basic frequency - auxiliary frequency (given by 4-5 terminal)		
			5: operation frequency = given by terminal 2-5 as proportion linkage signal		
			6: operation frequency = given by terminal 4-5 as proportion linkage signal		
			7: operation frequency = given by the terminal 3-5 as the proportion linkage signal		
			8: operation frequency = basic frequency + auxiliary frequency (given by 3-5 terminal)		
			9: operation frequency = basic frequency - auxiliary frequency (given by 3-5 terminal)		
P.241	08-02	PID sampling period	0~60000ms	20ms	212
P.242	10-05	Start DC brake function	0: No DC brake function before starting	0	227
			1: It has DC brake function before starting		
P.243	10-06	Start DC brake time	0~60.0s	0.5s	227
P.244	10-07	Start DC brake voltage	0~30.0%: 7.5K/5.5KG (inclusive) and types below	4.0%	227
			0~30.0%: 11K/7.5KG ~ 55K/45KG type	2.0%	
			0~30.0%: 75K/55KG (inclusive) and types above	1.0%	
P.245	06-12	Cooling fan operation mode	0: When running, the fan is ON, and after stopping for 30S, the fan is OFF	0	174
			1: When power-on, the fan is always ON, and when power-off, the fan is OFF		
			2:during operation, if the heat sink temperature is greater than 60℃, the fan is ON; If less than 40℃, the fan is OFF; When stopped, the fan is OFF		
			3: If the temperature value of the heat sink is greater than 60℃, the fan is ON; If it is less than 40℃, the fan is OFF.		
P.246	13-01	Modulation coefficient	0.90~1.20	1.00	259
P.247	10-29	MC switchover interlock time	0.1~100.0s	1.0s	121
P.248	10-30	Start waiting time	0.1~100.0s	0.5s	121
P.249	10-31	Frequency conversion-power frequency switching frequency	0~60.00Hz	99999	121
			99999: No automatic switching sequence		
P.250	10-32	Automatic switching operation range	0~10.00Hz: After switching from inverter operation to power frequency operation, the inverter start command (STF/STR) will be set OFF and then switch to inverter operation	99999	121
			99999: After switching from inverter operation to power frequency operation, the inverter start command (STF/STR) will be set OFF and then switch to inverter operation, and slow down to stop.		

Parameter number	Parameter group	Parameter name	Setting range	Default	Reference page
P.251	08-43	PID pressure range (Bar) setting	1.0~100.0	100.0	220
P.252	08-44	PID unit selection	0: % 1: bar 2: empty 3: kgs 4: kg 5: psi 6: Pa 7: kPa 8: MPa 9: C	0	220
P.253	08-45	Analog signal feedback loss detection time	0.0~600.0s	0.0s	220
P.254	08-46	Analog signal feedback loss action selection	0: Alarm AErr and inverter stop freely 1: Slow down to stop then alarm AErr 2: Alarm AErr and continue operation	0	220
P.255	01-36	S pattern time at the beginning of acceleration	0~25.00s/0~250.0s	0.20s	103
P.256	01-37	S pattern time at the end of acceleration	0~25.00s/0~250.0s 99999: Not selected	99999	103
P.257	01-38	S pattern time at the beginning of deceleration	0~25.00s/0~250.0s 99999: Not selected	99999	103
P.258	01-39	S pattern time at the end of acceleration	0~25.00s/0~250.0s 99999: Not selected	99999	103
P.259	00-09	Speed unit selection	X0: Speed display unit is 1 X1: Speed display unit is 0.1 0X: No decimal places for power accumulated value 1X: 1 decimal digit for power accumulated value 2X: 2 decimal digits for power accumulated value	1	83
P.260	06-10	Action selection of over torque detection	0: OL2 alarm will not be reported after over torque detection, and operation will continue. 1: OL2 alarm will be reported after over torque detection, and operation will stop.	1	173
P.261	06-17	Maintenance alarm function	0: No maintenance alarm function 1 ~ 9998day: used to set the time for maintenance alarm output signal	0	176
P.262	06-20	Output phase failure protection	0: No output phase failure protection If the input phase fails, the keypad displays “LF” alarm, and the inverter stops outputting	0	176
P.263	06-07	Decrease carrier protection setting	0: Fixed carrier frequency, and limit the load current according to the set carrier. 1: Fixed rated current, and limit the carrier according to the load current and temperature.	0	171
P.264	10-51	Over-excitation deceleration selection	0: No over-excitation deceleration function 1: Having over-excitation deceleration function	0	246
P.265	10-52	Over-excitation current level	0~200.0%	150.0%	246
P.266	10-53	Over-excitation gain	1.00~1.40	1.10	246

Parameter number	Parameter group	Parameter name	Setting range	Default	Reference page
P.267	10-45	Regeneration avoidance operation selection	0: No regeneration and avoidance function 1:The regeneration and avoidance function is valid during operation (automatic mode, automatic calculation of acceleration and deceleration during operation) 2: Regenerative avoidance is valid only at constant speed (automatic mode, automatic calculation of acceleration and deceleration during action) 3: The regeneration and avoidance function is valid during operation (manual mode, acceleration and deceleration are set by 10-49 (P.271) and 10-50 (P.272) during operation) 4: Regenerative avoidance is valid only at constant speed (manual mode, acceleration and deceleration are set by 10-49 (P.271) and 10-50 (P.272) during operation)	0	245
P.268	10-46	Regenerative avoidance dynamic voltage level	310~800V: 440V type	760V	245
P.269	10-47	DC bus voltage detection sensitivity at deceleration	0: Prevent regeneration avoidance from invalidation according to bus voltage change rate 1~5: Set detection sensitivity of bus voltage change rate, the larger the number, the higher the sensitivity.	0	245
P.270	10-48	Regeneration avoidance frequency compensation value	0~10.00Hz: Set the limitation of regenerative avoidance frequency compensation 99999: No frequency limit	6.00Hz	245
P.271	10-49	Regeneration avoidance voltage gain coefficient	0~400.0%/0~40.00%	100.0%	245
P.272	10-50	Regeneration avoidance frequency gain coefficient	0~400.0%/0~40.00%	100.0%	245
P.273	10-33	Power-off stop mode selection	0: No deceleration and stop function at power-off 1: No insufficient voltage avoidance (when power failure due to insufficient voltage, the inverter will slow down and stop) 2: No insufficient voltage avoidance (when power failure due to insufficient voltage, the inverter will slow down and stop. Restore reacceleration during power-off deceleration) 11: There is insufficient voltage avoidance (when power failure due to insufficient voltage, the inverter will slow down and stop) 12: There is insufficient voltage avoidance (when power failure due to insufficient voltage, the inverter will slow down and stop. Restore reacceleration during power-off deceleration)	0	242
P.274	10-34	Subtract the frequency at the beginning of deceleration	0~20.00Hz	3.00Hz	242
P.275	10-35	Deceleration processing of start frequency	0~120.00Hz: If the output frequency is ⩾ 10-35 (P.275), the deceleration starts from the output frequency-10-34 (P.274); If the output frequency is<10-35 (P.275), the deceleration starts from the output frequency 99999: The deceleration starts from the output frequency-10-34 (P.274)	50.00Hz	242

Parameter number	Parameter group	Parameter name	Setting range	Default	Reference page
P.276	10-36	Deceleration time during power failure 1	0~360.00s/0~3600.0s	5.00s	242
P.277	10-37	Deceleration time during power failure 2	0~360.00s/0~3600.0s: Set the deceleration time below the set frequency of 10-38 (P.278) 99999: Set the deceleration time to the set frequency of 10-38 (P.278)	99999	242
P.278	10-38	Deceleration time during power failure switchover frequency	0~650.00Hz	50.00Hz	242
P.279	10-39	UV avoidance voltage gain	0~200.0%	100.0%	242
P.281	06-13	Input phase failure protection	0: No input phase failure protection function 1: If the input phase fails, the keypad displays “IPF” alarm, and the inverter stops outputting	0	174
P.282	06-19	GF detection level in operation	315K/280KG and types below: 0~100.0% 355K/315KG types: 0~100.0%	50.0% 70.0%	176
P.285	13-02	Low frequency vibration suppression factor	0~8	5	259
P.286	13-03	High frequency vibration suppression factor	XX00~XX15 00XX ~15XX	509	259
P.287	06-14	SCP short circuit protection function	0: No output side short-circuit protection function 1: If the output side is short-circuited, the keypad displays “SCP” alarm, and the inverter stops outputting	1	175
P.288	06-40	Alarm code query	0~12	1	180
P.289	06-41	Alarm code display	Read only	Read only	180
P.290	06-42	Alarm message query	0~10	0	180
P.291	06-43	Alarm message display	Read only	Read only	180
P.292	06-27	Total inverter operation time (minutes)	0~1439min	0min	179
P.293	06-28	Total inverter operation time (days)	0~9999day	0day	179
P.294	00-04	Decryption parameter	0~65535	0	77
P.295	00-05	Password setup	2~65535	0	77
P.296	06-29	Total inverter power on time (minutes)	0~1439min	0min	179
P.297	06-30	Total inverter power on time (days)	0~9999day	0day	179
P.298	06-31	Output power (lower 16 bits)	Read only	Read only	179
P.299	06-32	Output power (higher 16 bits)	Read only	Read only	179
P.300	00-21	Motor control mode selection	0: Induction motor V/F control 1: Reserve 2: Induction motor simple vector control 3: Induction motor sensor less vector control 4~ 5: Reserve 6: Synchronous motor without PG vector control	0	86

Parameter number	Parameter group	Parameter name	Setting range	Default	Reference page
P.301	05-00	Motor parameter auto-tuning function selection	0: No motor parameter auto-tuning function	0	160
			1: Auto-tuning of induction motor parameters, during which the motor is running.		
			2: Auto-tuning of induction motor parameters, during which the motor is not running.		
			3: On-line auto-tuning function of induction motor		
			4: Reserve		
			5: Auto-tuning of induction motor parameters, during which the motor is not running.		
			8: Auto-tuning of synchronous motor parameters		
P.302	05-01	Rated power of motor	0~650.00kW	0.00kW	162
P.303	05-02	Pole number of motor	0~256	4	162
P.304	05-03	Rated voltage of motor	440 voltage range: 0~510V	440V	162
P.305	05-04	Rated frequency of motor	50Hz system setting: 0~650.00Hz	50.00Hz	162
			60Hz system setting: 0~650.00Hz	60.00Hz	
P.306	05-05	Rated current of motor	0~500.00A:Types below Frame G	According to type	162
			0~5000.0A: Frame G and types above		
P.307	05-06	Rated rotation speed of motor	50Hz system setting: 0~65000r/min	1410r/min	162
			60Hz system setting: 0~65000r/min	1710r/min	
P.308	05-07	Excitation current of motor	0~500.00A: Types below Frame G	According to type	162
			0~5000.0A: Frame G and types above		
P.309	05-08	IM motor stator resistance	0~65000mΩ: 55K/45KG and types below	According to type	162
			0~650.00mΩ: 75K/55KG and types above		
P.310	05-09	IM motor rotor resistance	0~65000mΩ: 55K/45KG and types below	According to type	162
			0~650.00mΩ: 75K/55KG and types above		
P.311	05-10	IM motor leakage inductance	0~6500.0mH: 55K/45KG and types below	According to type	162
			0~650.00mH: 75K/55KG and types above		
P.312	05-11	IM motor mutual inductance	0~6500.0mH: 55K/45KG and types below	According to type	162
			0~650.00mH: 75K/55KG and types above		
P.313	05-12	PM motor stator resistance	0~65000mΩ: 55K/45KG and types below	According to type	162
			0~650.00mΩ: 75K/55KG and types above		
P.314	05-13	PM motor d-axis inductance	0~650.00mH	According to type	162
P.315	05-14	PM motor q-axis inductance	0~650.00mH	According to type	162
P.316	05-15	PM motor Back-EMF coefficient	0~6500.0V/krpm	According to type	162
P.318	05-17	Rotary inertia	0~6.5000kg.m^2: 7.5K/5.5KG and types below	According to type	162
			0~65.000kg.m^2: 11K/ 7.5KG~ 90K/75KG types		
			0~650.00kg.m^2: 132K/110KG and types above	According to type	
P.319	05-18	Load inertia ratio	0~600.0	1.0	162
P.320	11-00	Speed control proportional coefficient 1	0~200.00	10.00	252
P.321	11-01	Speed control integral time 1	0~20.000s	0.500s	252

Parameter number	Parameter group	Parameter name	Setting range	Default	Reference page
P.322	11-02	PI coefficient switchover frequency 1	11-25 (P.414)~11-05 (P.325)Hz	5.00Hz	252
P.323	11-03	Speed control proportional coefficient 2	0~200.00	10.00	252
P.324	11-04	Speed control integral time 2	0~20.000s	0.500s	252
P.325	11-05	PI coefficient switchover frequency 2	11-02 (P.322)~650.00Hz	10.00Hz	252
P.326	11-06	Current control proportional coefficient	0~20	0	252
P.327	11-07	PM motor type	0: SPM 1: IPM	0	254
P.328	11-08	PM motor initial position detection method	0: Pull-in mode 1: High frequency pulse vibration mode	0	254
P.329	11-09	PM motor acceleration id	0~200%	80%	254
P.330	11-10	PM motor constant speed id	0~200%	0%	254
P.331	11-11	PM motor estimated speed filtering time	0~1000ms	2ms	254
P.332	05-22	Rated power of motor 2	0~650.00kW 99999	99999	163
P.333	05-23	Pole number of motor 2	0~256 99999	99999	163
P.334	05-24	Rated voltage of motor 2	440 voltage range: 0~510V 99999	99999	163
P.335	05-25	Rated frequency of motor 2	0~650.00Hz 99999	99999	163
P.336	05-26	Rated current of motor 2	0~500.00A: Types below Frame G 0~5000.0A: Frame G and types above 99999	99999	163
P.337	05-27	Rated rotation speed of motor 2	0~65000r/min 99999	99999	164
P.338	05-28	Excitation current of motor 2	0~500.00A: Types below Frame G 0~5000.0A: Frame G and types above 99999	99999	164
P.339	05-29	(IM) stator resistance of motor 2	0~65000mΩ: 55K/45KG and types below 0~650.00mΩ: 75K/55KG and types above 99999	99999	164
P.340	05-30	(IM) rotor resistance of motor 2	0~65000mΩ: 55K/45KG and types below 0~650.00mΩ: 75K/55KG and types above 99999	99999	164
P.341	05-31	(IM) leakage inductance of motor 2	0~6500.0mH: 55K/45KG and types below 0~650.00mH: 75K/55KG and types above 99999	99999	164
P.342	05-32	(IM) mutual inductance of motor 2	0~6500.0mH: 55K/45KG and types below 0~650.00mH: 75K/55KG and types above 99999	99999 99999	164
P.343	05-33	(PM) stator resistance of motor 2	0~65000mΩ: 55K/45KG and types below 0~650.00mΩ: 75K/55KG and types above 99999	99999	164
P.344	05-34	(PM) d-axis inductance of motor 2	0~650.00mH 99999	99999	164

Parameter number	Parameter group	Parameter name	Setting range	Default	Reference page
P.345	05-35	(PM) q-axis inductance of motor 2	0~650.00mH 99999	99999	164
P.346	05-36	(PM) stator resistance of motor 2	0~6500.0V/krpm 99999	99999	164
P.362	10-54	Short-circuit brake time at PM motor start	0~60.0s	0.0s	246
P.366	11-43	PM motor estimated speed observer Kp	0~65000	30	257
P.367	11-44	PM motor estimated speed observer Ki	0~65000	10000	257
P.368	11-52	Velocity loop output low-pass filter time constant	0~500.0ms	0	258
P.370	00-22	Second motor control mode selection	0: Induction motor V/F control 1: Reserve 2: Induction motor simple vector control 3: Induction motor sensor less vector control 4~ 5: Reserve 6: Synchronous motor without PG vector control 99999: Second motor control mode is not selected	99999	86
P.371	11-30	Second motor speed control proportional coefficient 1	0~200.00 99999	10.00	254
P.372	11-31	Second motor speed control integral time 1	0~20.000s 99999	0.500s	254
P.373	11-32	Second motor PI coefficient switchover frequency 1	0~11-35 (P.376)Hz 99999	5.00Hz	254
P.374	11-33	Second motor speed control proportional coefficient 2	0~200.00 99999	10.00	254
P.375	11-34	Second motor speed control integral time 2	0~20.000s 99999	0.500s	254
P.376	11-35	Second motor PI coefficient switchover frequency 2	11-32(P.373)~650.00Hz 99999	10.00Hz	254
P.377	11-36	Second motor current control proportional coefficient	0~20 99999	0	254
P.378	11-37	Second PM motor type	0: SPM 1: IPM 99999	0	255

Appendix 1: Parameter table

Parameter number	Parameter group	Parameter name	Setting range	Default	Reference page
P.379	11-38	Second PM motor initial position detection method	0: Pull-in mode 1: High frequency pulse vibration mode 99999	0	255
P.380	11-39	Second PM motor acceleration id	0~200% 99999	80%	255
P.381	11-40	Second PM motor constant speed id	0~200% 99999	0%	255
P.382	11-41	Second PM motor estimated speed filtering time	0~1000ms 99999	2ms	255
P.387	11-48	zero-speed bandwidth of velocity loop	0~100.0Hz	5.0Hz	256
P.388	11-49	Low-speed bandwidth of velocity loop	0~100.0Hz	5.0Hz	256
P.389	11-50	High-speed bandwidth of velocity loop	0~100.0Hz	5.0Hz	256
P.390	11-51	Velocity loop self-tuning selection	0: Invalid velocity loop self-tuning 1: Valid velocity loop self-tuning	0	256
P.394	05-38	Inertia of motor 2	0~6.5000kg. m^2: 7.5K/5.5KG and types below 0~65.000kg.m^2: 11K/7.5KG ~ 90K/75KG types 0~650.00kg.m^2: 132K/110KG types and above 99999	99999	164
P.395	05-39	Load inertia ratio of motor 2	0~600.0 99999	99999	164
P.408	11-19	Forward-rotation electronic torque limit	0~400.0%	200.0%	253
P.409	11-20	Reverse-rotation regenerative torque limit	0~400.0%	200.0%	253
P.410	11-21	Reverse-rotation electronic torque limit	0~400.0%	200.0%	253
P.411	11-22	Forward-rotation regenerative torque limit	0~400.0%	200.0%	253
P.412	11-23	Zero-speed proportional coefficient	0~200.00	10.00	250
P.413	11-24	Zero-speed integral time	0~20.000s	0.500s	250
P.414	11-25	Zero-speed switching frequency	0~11-02 (P.322)Hz	5.00Hz	250
P.415	11-26	IM motor estimated speed filtering time	0-100.00ms	0	251
P.480	13-04	Vibration suppression mode	0：vibration suppression disable 1：vibration suppression mode 1 2：vibration suppression mode 2 3：vibration suppression mode 3	1	259
P.481	13-05	Vibration suppression factor	0~100.0	10.0	259
P.482	13-06	Vibration suppression Kp	0~500	50	259
P.483	13-07	Vibration suppression time	0~65000	1010	259
P.500	02-00	Function selection of terminal 2-5	0: Non-function 1: Frequency reference 2: Reserve 3: PID target value 4: PID feedback signal 5~ 10: Reserve 11: PTC 12: PT100 13: VF detached function	1	110
P.501	02-01	Function selection of terminal 4-5	The same as 02-00(P.500)	1	110

Parameter number	Parameter group	Parameter name	Setting range	Default	Reference page
P.503	02-03	Function of terminal HDI	The same as 02-00(P.500)	0	110
P.504	02-02	Function selection of terminal 3-5	The same as 02-00(P.500)	0	110
P.505	02-23	Bias rate of 4-5 current/voltage signal	-100.0%~100.0%	0.0%	119
P.507	02-32	Bias rate of 3-5 voltage signal	-100.0%~100.0%	0.0%	121
P.508	02-30	Maximum operation frequency of terminal 3-5	50Hz system setting: 1.00~650.00Hz	50.00Hz	121
			60Hz system setting: 1.00~650.00Hz	60.00Hz	
P.510	02-18	Percentage correspond to minimum negative voltage of terminal 2-5	-100.0~100.0%	0.0%	113
P.511	02-19	Percentage correspond to maximum negative voltage of terminal 2-5	-100.0~100.0%	0.0%	113
P.512	02-16	Minimum input negative voltage of 2-5	0~10.00V	0.00V	113
P.513	02-17	Maximum input negative voltage of 2-5	0~10.00V	0.00V	113
P.522	02-41	Percentage corresponding to HDI input minimum frequency	-100.0%~100.0%	0.0%	122
P.523	02-42	Percentage corresponding to HDI input maximum frequency	-100.0%~100.0%	100.0%	122
P.524	02-39	HDI input minimum frequency	0~100.00kHz	0.00kHz	122
P.525	02-40	HDI input maximum frequency	0~100.00kHz	100.00kHz	122
P.526	02-38	HDI filter time	0~2000ms	10ms	122
P.527	02-31	3-5 filter time	0~2000ms	30ms	121
P.528	02-22	4-5 filter time	0~2000ms	30ms	119
P.531	02-29	3-5 signal selection	0: Effective range of signal sampling is 4~20mA.	1	121
			1: Effective range of signal sampling is 0~10V		
			2: Effective range of signal sampling is 0~5V		
P.533	06-15	PTC alarm handling Mode	0: Warning and continue	0	175
			1: Set off warning and slow down		
			2: Set off alarm and stop freely		
			3: No warning		
P.534	06-16	PTC level percentage	0~100.0%	0.0%	175
P.535	02-50	AM2 output bias	0~150.00%	0.00%	125
P.536	02-49	AM1 output gain	0~150.00%	100.00%	125
P.537	02-05	AM2 output function selection	6: Steady level output, voltage or current output level is set by 02-53 (P.539).	0	111
			0~5, 7~13: the same as 02-04(P.54).		
P.538	02-48	AM2 output signal selection	The same as 02-45(P.64)	0	125
P.539	02-53	AM2 fixed output level	0~100.0%	0.0%	126
P.541	02-54	AM1/FM fixed output level	0~100.0%	0.0%	126

Appendix 1: Parameter table

Parameter number	Parameter group	Parameter name	Setting range	Default	Reference page
P.543	02-44	FM output function selection	0: Output frequency, the frequency display reference 02-51 (P.55) is 100%.	0	123
			1: Output current, the frequency display reference 02-52 (P.56) is 100%.		
			2: Output DC bus voltage, OV level is 100%.		
			3: Output temperature rising accumulation rate of inverter, the NTC level is 100%.		
			4: Output the electronic thermal rate of the inverter: the electronic thermal relay running (06-00(P.9)≠0) or the electronic thermal relay of the inverter's IGBT module running (06-00(P.9)=0) is 100%.		
			5: Target frequency, the frequency display reference 02-51(P.55) is 100%.		
			6: Fixed pulse output, pulse output level is set by 02-54(P.541).		
			7: Output voltage, inverter rated voltage is 100%.		
			8: Excitation current, the motor rated current is 100%.(Valid only when 00-21(P.300) or 00-22(P.370) is set to 3-6).		
			9: Output torque, two times motor rated torque is 100%.(Valid only when 00-21(P.300) or 00-22(P.370) is set o 3-6)		
			10: Output power, two times motor rated power is 100%.		
			11: The high-speed pulse input, 100.00KHz is 100%.		
			12: Motor operation speed, to display the level of 02-51(P.55) is 100%.		
P.545	02-33	3-5 disconnection selection	0: No disconnection selection	0	121
			1: Decelerate to 0Hz; multi-function digital output terminal will set off alarm.		
			2: Inverter will stop immediately, and keypad will display "AEr" alarm.		
			3: Inverter will run continuously according to frequency reference before the disconnection. Multi-function digital output terminal will set off alarm.		
P.546	02-36	Percentage corresponding to minimum input current/ voltage of terminal 3-5	-100.0%~100.0%	0.0%	121
P.547	02-37	Percentage corresponding to maximum input current /voltage of terminal 3-5	-100.0%~100.0%	100.0%	121
P.548	02-34	Minimum input current/voltage of terminal 3-5	0~10.00V	0.00V	121
P.549	02-35	Maximum input current/voltage of terminal 3-5	0~10.00V	10.00V	121

Parameter number	Parameter group	Parameter name	Setting range	Default	Reference page
P.550	03-09	HDI terminal function setting	The same as 03-00(P.83)	57	136
P.551	03-25	Digital input terminal M10	The same as 03-00(P.83)	99999	146
P.552	03-26	Digital input terminal M11	The same as 03-00(P.83)	99999	146
P.553	03-27	Digital input terminal M12	The same as 03-00(P.83)	99999	146
P.554	03-28	Digital input terminal M13	The same as 03-00(P.83)	99999	146
P.555	03-29	Digital input terminal M14	The same as 03-00(P.83)	99999	146
P.556	03-30	Digital input terminal M15	The same as 03-00(P.83)	99999	146
P.567	03-41	The positive and negative logic of the external digital input terminal	0~65535	0	147
P.568	03-42	Digital output terminal A10	The same as 03-10(P.40)	99999	147
P.569	03-43	Digital output terminal A11	The same as 03-10(P.40)	99999	147
P.570	03-44	Digital output terminal A12	The same as 03-10(P.40)	99999	147
P.571	03-45	Digital output terminal A13	The same as 03-10(P.40)	99999	147
P.572	03-46	Digital output terminal A14	The same as 03-10(P.40)	99999	147
P.573	03-47	Digital output terminal A15	The same as 03-10(P.40)	99999	147
P.574	03-48	Digital output terminal A16	The same as 03-10(P.40)	99999	147
P.575	03-49	Digital output terminal A17	The same as 03-10(P.40)	99999	147
P.585	03-59	Monitor digital input terminal signal status on inverter	Read only	Read only	148
P.586	03-60	Monitor digital output terminal signal status on and external of inverter	Read only	Read only	148
P.587	03-61	Monitor external digital input terminal signal status	Read only	Read only	148
P.592	02-55	PT100 voltage level 1	0~10.00V	5.00V	127
P.593	02-56	PT100 voltage level 2	0~10.00V	7.00V	127
P.594	02-57	PT100 level 1 starting frequency	0~650.00Hz	0.00Hz	127
P.595	02-58	Starting PT100 level 1 delay time	0~6000s	60s	127
P.641	08-20	Proportional gain P2	0.1%~1000.0%	20.0%	216
P.642	08-21	Integral time I2	0~60.00s	1.00s	216
P.643	08-22	Differential time D2	0~10000ms	0ms	216
P.700	10-40	VF separated voltage source	0: Number given 10-41 (P.701) 1: Analog quantity given or HDI pulse given	0	243
P.701	10-41	VF separated voltage value	50Hz/60Hz system setting: 0~440.00V	By voltage	243
P.702	10-42	VF separated voltage acceleration time	0~1000.0s	0.0s	243
P.703	10-43	VF separated voltage deceleration time	0~1000.0s	0.0s	243
P.704	10-44	VF separated shutdown mode selection	0: Frequency/voltage independently reduced to 0 1: Reduce the voltage to zero and then reduce the frequency	0	243
P.705	06-21	Low voltage level	310~440V: 440V type	310V	177
P.706	06-22	Regenerative brake operation level	410~800V: 440V type	720V	177
P.707	06-23	Voltage stall level	410~800V: 440V type	760V	177
P.708	06-24	Capacitor lifetime detection	0~1	0	178
P.709	06-25	Electrolytic capacitor lifetime detection level	0~100.0%	100.0%	178

Parameter number	Parameter group	Parameter name	Setting range	Default	Reference page
P.710	06-26	Electrolytic capacitor lifetime detection result	0: No abnormal 1: Abnormal electrolytic capacitance	Read only	178
P.711	08-24	PID target filtering time	0~650.00s	0.00s	215
P.712	08-25	PID feedback filtering time	0~60.00s	0.00s	215
P.713	08-26	PID output filtering time	0~60.00s	0.00s	215
P.714	08-27	PID bias control limit	0~100.00%	0.00%	216
P.715	08-28	Integral separation attribute	0: No integral separation 1: Integral separation	0	216
P.716	08-29	Integral separation point	0~100.00%	50.00%	216
P.717	08-30	PID differential limit	0~100.00%	0.10%	216
P.718	08-31	PID output positive deviation limit	0~100.00%	100.00%	217
P.719	08-32	PID output negative deviation limit	0~100.00%	100.00%	217
P.720	08-33	PID parameter switchover operation selection	0: No PID parameter switchover 1: PID parameter switchover by deviation	0	217
P.721	08-34	PID parameter switchover deviation lower limit	0~100.00%	20.00%	217
P.722	08-35	PID parameter switchover deviation upper limit	0~100.00%	80.00%	217
P.723	08-36	PID disconnection operation option 1	0: Select no need to run to the upper limit when PID is disconnected 1: Select the need to run to the upper limit when PID is disconnected	1	218
P.726	08-39	PID shutdown operation action selection	0: PID shutdown without operation 1: PID shutdown with operation	0	218
P.727	08-40	PID allowed reverse rotation action selection	0: PID does not allow reverse rotation 1: PID allows reverse rotation	0	218
P.728	08-41	PID negative integral limit	0~100.0%	0.0%	218
P.729	08-42	PID minimum output frequency	0~10.00Hz	0.00Hz	218
P.740	06-44	E1	Read only	Read only	181
P.741	06-45	E2	Read only	Read only	181
P.742	06-46	E3	Read only	Read only	181
P.743	06-47	E4	Read only	Read only	181
P.744	06-48	E5	Read only	Read only	181
P.745	06-49	E6	Read only	Read only	181
P.746	06-50	E7	Read only	Read only	181
P.747	06-51	E8	Read only	Read only	181
P.748	06-52	E9	Read only	Read only	181
P.749	06-53	E10	Read only	Read only	181
P.750	06-54	E11	Read only	Read only	181
P.751	06-55	E12	Read only	Read only	181
P.752	06-56	Output frequency during E1 alarm	Read only	Read only	182
P.753	06-57	Output current during E1 alarm	Read only	Read only	182
P.754	06-58	Output voltage during E1 alarm	Read only	Read only	182
P.755	06-59	Temperature rising accumulation rate during E1 alarm	Read only	Read only	182
P.756	06-60	PN voltage during E1 alarm	Read only	Read only	182
P.757	06-61	Total inverter operation time during E1 alarm	Read only	Read only	182

Parameter number	Parameter group	Parameter name	Setting range	Default	Reference page
P.758	06-62	Inverter operation status code during E1 alarm	Read only	Read only	182
P.759	06-63	E1 alarm date (years/months)	Read only	Read only	182
P.760	06-64	E1 alarm date (days/hours)	Read only	Read only	182
P.761	06-65	E1 alarm date (minutes/seconds)	Read only	Read only	182
P.766	06-70	Output frequency during E2 alarm	Read only	Read only	183
P.767	06-71	Output current during E2 alarm	Read only	Read only	183
P.768	06-72	Output voltage during E2 alarm	Read only	Read only	183
P.769	06-73	Temperature rising accumulation rate during E2 alarm	Read only	Read only	183
P.770	06-74	PN voltage during E2 alarm	Read only	Read only	183
P.771	06-75	Total inverter operation time during E2 alarm	Read only	Read only	183
P.772	06-76	Inverter operation status code during E2 alarm	Read only	Read only	183
P.773	06-77	E2 alarm date (years/months)	Read only	Read only	183
P.774	06-78	E2 alarm date (days/hours)	Read only	Read only	183
P.775	06-79	E2 alarm date (minutes/seconds)	Read only	Read only	183
P.780	10-55	PLC operation selection	0: PLC function invalid 1: PLC function is valid, PLC RUN signal comes from external terminal input signal or 10-56 (P.781). 2: PLC function is valid, PLC RUN signal comes from external terminal input signal.	0	247
P.781	10-56	PLC operation	0: No influence. 1: PLC RUN	0	247
P.782	10-57	PLC erasure	0: Invalid 1: Erase PLC program, the parameter value will be 0 after successful erasing.	0	247
P.783	10-58	PLC component monitoring selection	0~326	0	247
P.784	10-59	PLC component monitoring value	Read only	Read only	247
P.800	07-15	CANopen slave address	0~127	0	205
P.801	07-16	CANopen rate	0: 1Mbps 1: 500Kbps 2: 250K/280KFbps 3: 125Kbps 4: 100Kbps 5: 50 Kbps	0	205
P.802	07-17	CANopen communication status	0: Node retry status 1: Communication retry status 2: Retry completion status 3: Pre-operation status 4: Operating status 5: Stop status	0	205

Appendix 1: Parameter table

Parameter number	Parameter group	Parameter name	Setting range	Default	Reference page
P.803	07-18	CANopen control status	0: Boot not completed status 1: Forbidden operation state 2: Pre-excitation status 3: Excitation state 4: Allowed operating state 7: Quick action stop status 13: Trigger error action status 14: Error status	0	205
P.810	07-25	PU communication protocol selection	0: Modbus protocol 1: Shihlin protocol 2: PLC protocol (Effective when using Shihlin built-in PLC)	1	190
P.811	07-26	PU inverter communication station number	0~254	0	190
P.812	07-27	PU serial communication baud rate	0: baud rate is 4800bps 1: baud rate is 9600bps 2: baud rate is 19200bps 3: baud rate is 38400bps 4: baud rate is 57600bps 5: baud rate is 115200bps	1	190
P.813	07-28	PU data length	0: 8bit 1: 7bit	0	190
P.814	07-29	PU stop bit length	0: 1bit 1: 2bit	0	190
P.815	07-30	PU parity check selection	0: No parity check 1: Odd check 2: Even check	0	191
P.816	07-31	PU CR/LF selection	1: CR only 2: Both CR and LF are available	1	191
P.817	07-32	PU Modbus communication format	0: 1,7,N,2 (Modbus, ASCII) 1: 1,7,E,1 (Modbus, ASCII) 2: 1,7,O,1 (Modbus, ASCII) 3: 1,8,N,2 (Modbus, RTU) 4: 1,8,E,1 (Modbus, RTU) 5: 1,8,O,1 (Modbus, RTU)	4	191
P.818	07-33	PU communication abnormal allowable times	0~10	1	191
P.819	07-34	PU communication interval allowed time	0~999.8s: Checking communication timeout with the set value 99999: No timeout check	99999	191
P.820	07-35	PU communication error handling	0: Alarm and idling and stopping 1: No alarm and continuing to operation	1	191
P.826	07-41	Communication abnormal allowable times of communication card (optional)	0~10	1	191
P.827	07-42	Communication error handling of communication card (optional)	0: Alarm and idling and stopping 1: No alarm and continuing to operation	1	191

Parameter number	Parameter group	Parameter name	Setting range	Default	Reference page
P.828	07-43	Communication interval allowed time of communication card (optional)	0~999.8s: Checking communication timeout with the set value 99999: No timeout check	99999	191
P.829	07-44	Version of EP301 communication card (optional)	Read only	Read only	206
P.830	07-45	IP configuration	0: Static IP 1: Dynamic IP	0	206
P.831	07-46	IP address 1	0~255	192	206
P.832	07-47	IP address 2	0~255	168	206
P.833	07-48	IP address 3	0~255	2	206
P.834	07-49	IP address 4	0~255	102	206
P.835	07-50	Subnet mask 1	0~255	255	206
P.836	07-51	Subnet mask 2	0~255	255	206
P.837	07-52	Subnet mask 3	0~255	255	206
P.838	07-53	Subnet mask 4	0~255	0	206
P.839	07-54	Default gateway 1	0~255	192	206
P.840	07-55	Default gateway 2	0~255	168	206
P.841	07-56	Default gateway 3	0~255	2	206
P.842	07-57	Default gateway 4	0~255	100	206
P.900	15-00	User registered parameter 1	P parameter mode: 0~1299 Parameter group mode: 00-00~15-99	99999	261
P.901	15-01	User registered parameter 2		99999	261
P.902	15-02	User registered parameter 3		99999	261
P.903	15-03	User registered parameter 4		99999	261
P.904	15-04	User registered parameter 5		99999	261
P.905	15-05	User registered parameter 6		99999	261
P.906	15-06	User registered parameter 7		99999	261
P.907	15-07	User registered parameter 8		99999	261
P.908	15-08	User registered parameter 9		99999	261
P.909	15-09	User registered parameter 10		99999	261
P.910	15-10	User registered parameter 11		99999	261
P.911	15-11	User registered parameter 12		99999	261
P.912	15-12	User registered parameter 13		99999	261
P.913	15-13	User registered parameter 14		99999	261
P.914	15-14	User registered parameter 15		99999	261
P.915	15-15	User registered parameter 16		99999	261
P.916	15-16	User registered parameter 17		99999	261
P.917	15-17	User registered parameter 18		99999	261
P.918	15-18	User registered parameter 19		99999	261
P.919	15-19	User registered parameter 20		99999	261
P.990	00-25	Parameter mode setting	0: Parameter is displayed as “group mode” 1: Parameter is displayed as “order number”	0	88

Appendix 1: Parameter table

Parameter number	Parameter group	Parameter name	Setting range	Default	Reference page
P.996 ~ P.999	00-02	Parameter restoration	0: Non-function 1: Alarm history clear (P.996=1) 2: Inverter reset (P.997=1) 3: Restoring all parameters to default values (P.998=1) 4: Restoring some parameters to default values 1 (P.999=1) 5: Restoring some parameters to default values 2 (P.999=2) 6: Restoring some parameters to default values 3 (P.999=3)	0	77
P.1000	16-00	Water supply mode selection	0：invalid 1：Ordinary water supply mode 2：Manual soft start mode	0	265
P.1001	16-01	Pump 1 type selection	0：Invalid pump 1：Variable frequency pump 2：Pump power frequency 3：Dormant pump 4：Sewage pump	0	265
P.1002	16-02	Pump 2 type selection	Same as 16-01(P.1001)	0	265
P.1003	16-03	Pump 3 type selection	Same as 16-01(P.1001)	0	265
P.1004	16-04	Pump 4 type selection	Same as 16-01(P.1001)	0	265
P.1005	16-05	Pump 5 type selection	Same as 16-01(P.1001)	0	265
P.1006	16-06	Pump 6 type selection	Same as 16-01(P.1001)	0	265
P.1007	16-07	Pump 7 type selection	Same as 16-01(P.1001)	0	265
P.1008	16-08	Manual soft start switching frequency	0~120.00Hz	50.00Hz	265
P.1009	16-09	Add pump pressure tolerance	0.0~100.0%	10.0%	265
P.1010	16-10	Add pump to judge time	0~3600s	60s	265
P.1011	16-11	Add frequency conversion pump switching frequency	0~120.00Hz	50.00Hz	265
P.1012	16-12	Pump running frequency	0~120.00Hz	50.00Hz	265
P.1013	16-13	Processing frequency pump frequency conversion pump deceleration time	0~360.00s/0~3600.0s	10.00s	265
P.1014	16-14	Reduce pump pressure tolerance	0.0~100.0%	10.0%	266
P.1015	16-15	Reduce pump judgment time	0~3600s	60s	266
P.1016	16-16	Reduce pump operating frequency	0~120.00Hz	20.00Hz	266
P.1017	16-17	Acceleration time of variable frequency pump when reducing pump	0~360.00s/0~3600.0s	10.00s	266
P.1018	16-18	Contactor pull delay	0.1~10.0s	1.0s	266
P.1019	16-19	Closing delay of contactor	0.1~10.0s	1.0s	266
P.1020	16-20	Variable frequency pump wheel cycle	0.0~6000.0h	0.0h	266

Parameter number	Parameter group	Parameter name	Setting range	Default	Reference page
P.1021	16-21	Power frequency pump wheel cycle	0.0~6000.0h	0.0h	266
P.1022	16-22	Water supply PID hibernation function selection	0：Hibernation invalid, inverter running PID 1：Hibernate	0	266
P.1023	16-23	Water dormancy wake up pressure tolerance	0.0~100.0%	10.0%	266
P.1024	16-24	Water wake duration	0～3600s	60s	266
P.1025	16-25	Dormancy pump dormant period stop judge time	0~3600s	500s	267
P.1026	16-26	Hydraulic overpressure protection collimation	0~200.0%	150.0%	267
P.1027	16-27	Hydraulic overpressure judgment time	0~3600s	500s	267
P.1028	16-28	Hydraulic underpressure protection collimation	0~100.0%	0.0%	267
P.1029	16-29	Hydraulic underpressure judgment time	0~3600s	500s	267
P.1040	06-84	Fire mode	XXX0:Off (fire mode off (normal mode) XXX1:Forward operation (inverter runs forward in fire mode) XXX2:Reverse operation (inverter runs reverse in fire mode) XX0X:Bypass off (close bypass function) XX1X:Bypass on (enable bypass function) X0XX: Open loop control (inverter will speed up to fire mode frequency 06-85 (P.1041)) X1XX: Closed loop control (run in PID, PID target set in 06-87 (P.1043)) 0XXX: Manual exit fire mode (after the fire mode terminal function is off, manually reset inverter to go to normall mode) 1XXX: Auto exit fire mode (after the fire mode terminal function is off, inverter automatically return to normal mode)	0	184
P.1041	06-85	Fire mode frequency	0~650.00Hz	60.00Hz	184
P.1042	06-86	Fire mode bypass delay	0.0~6000.0s	0.0s	184
P.1043	06-87	Fire mode PID target	0~08-43(P.251)	0.0	184
P.1044	06-88	Fire mode cumulate times	Read only	Read only	184

7.1.2 Arrange by function group

Parameter group	Parameter number	Parameter name	Setting range	Default	Reference page
00-00	P.90	Inverter model	Read only	Read only	74
00-01	P.188	Firmware version	Read only	Read only	74
00-02	P.996 ~ P.999	Parameter restoration	0: Non-function	0	77
			1: Alarm history clear (P.996=1)		
			2: Inverter reset (P.997=1)		
			3: Restoring all parameters to default values (P.998=1)		
			4: Restoring some parameters to default values 1 (P.999=1)		
			5: Restoring some parameters to default values 2 (P.999=2)		
			6: Restoring some parameters to default values 3 (P.999=3)		
00-03	P.77	Selection of parameters write protection	0: Parameters can be written only when the motor stops.	0	77
			1: Parameters cannot be written.		
			2: Parameters can also be written when the motor is running.		
			3: Parameters cannot be read when in password protection.		
00-04	P.294	Decryption parameter	0~ 65535	0	77
00-05	P.295	Password setup	2~ 65535	0	77
00-06	P.110	Keypad monitoring selection	X0: When the inverter starts, keypad enters the monitoring mode automatically, screen displays the output frequency.	1	80
			X1: When the inverter starts, screen of the keypad displays target frequency.		
			X2：When inverter starts, keypad enters monitor mode automatically, screen displays current pressure and feedback pressure of the constant pressure system in percentage		
			X5：When inverter starts, keypad enters monitor mode automatically, screen displays current pressure and feedback pressure of the constant pressure system (valid with PU301C)		
			0X: The boot screen is monitor output frequency mode		
			1X: The boot screen is target frequency setting mode		
			2X: The boot screen is monitor output current mode		
			3X: The boot screen is monitor output voltage mode		
00-07	P.161	Multi-function display	0: Output voltage (V)	0	81
			1: Inverter voltage between (+/P) and (-/N) terminals (V)		
			2: Temperature rising accumulation rate of inverter (%)		
			3: Target pressure of the constant pressure system (%)		
			4: Feedback pressure of the constant pressure system (%)		
			5: Operation frequency (Hz)		
			6: Electronic thermal accumulation rate (%)		
			7: Signal value (V) of 2-5 simulating input terminals		
			8: Signal value (mA) of 4-5 simulating input terminals (mA/V)		
			9: Output power (kW)		
			10: Current rotation speed of the motor (Hz)		
			11:Positive and reverse rotation signal. 1 represents positive rotation, 2 represents reverse rotation, and 0 represents stopping state		
			12: NTC temperature (℃)		
			13: Thermal accumulation rate of motor (%)		
			14: Reserve		
			15: Input frequency of terminal HDI (kHz)		
			16~ 17: Reserve		

Parameter group	Parameter number	Parameter name	Setting range	Default	Reference page
00-07	P.161	Multi-function display	18: Output torque of inverter (%) (Valid only when00-21 (P. 300) or 00-22 (P. 370) is set to 3 ~ 6)	0	81
			19: Digital input terminal signal state		
			20: Digital output terminal signal state		
			21: Actual working carrier frequency		
			22: Signal value (mA) of 3-5 analog input terminals (mA/V)		
			23: Reserve		
			24: Current target frequency		
			25: PTC input percentage		
			26: Target and feedback pressure of the constant ☐ pressure system		
			27: Current rotation speed of the motor (rpm)		
			28: Power factor		
			29: Power accumulated value KWH		
00-08	P.37	Speed display	0: Display output frequency (not mechanical speed)	0.0	83
			0.1~ 5000.0		
			1~ 50000		
00-09	P.259	Speed unit selection	X0: Speed display unit is 1	1	83
			X1: Speed display unit is 0.1		
			0X: No decimal places for power accumulated value KWH		
			1X: 1 decimal digit for power accumulated value KWH		
			2X: 2 decimal digits for power accumulated value KWH		
00-11	P.72	Carrier frequency	Frame A/B: 1~15KHz	2 kHz	83
			Frame C/D: 1~10 kHz	2 kHz	
			Frame E/F: 1~9 kHz	2 kHz	
			Frame G/H: 1~4 kHz	2 kHz	
00-12	P.31	Soft-PWM carrier selection	0: None Soft-PWM operation	0	83
			1: When 00-11(P.72)< 5, Soft-PWM is valid (only apply to V/F control)		
00-13	P.71	Idling braking / DC braking	0: Idling braking	1	84
			1: DC braking		
00-14	P.75	Stop function selection	0: Press STOP button to stop the motor in PU and H2 mode	1	84
			1: Press STOP button to stop the motor in all mode		
00-15	P.78	Forward/reverse rotation prevention selection	0: Forward rotation and reverse rotation are both permitted.	0	85
			1: Reverse rotation is prohibited (Sending reverse command refer to decelerate and stop the motor)		
			2: Forward rotation is prohibited (Sending forward command refer to decelerate and stop the motor)		
00-16	P.79	Operation mode selection	0: “PU mode”, “external mode” and “Jog mode” ☐ are interchangeable	0	85
			1: “PU mode” and “JOG mode” are interchangeable		
			2: “External mode” only		
			3: “Communication mode” only		
			4: “Combined mode 1”		
			5: “Combined mode 2”		
			6: “Combined mode 3”		
			7: “Combined mode 4”		
			8: “Combined mode 5”		
			99999: Second operation mode, run command is set by 00-18(P.109), target frequency is set by 00-17(P.97)		

Appendix 1: Parameter table

Parameter group	Parameter number	Parameter name	Setting range	Default	Reference page
00-17	P.97	Second target frequency selection	0: Frequency set by keypad	0	85
			1: Frequency set by communication RS485		
			2: Frequency set by analog signal		
			3: Frequency set by communication card(optional)		
			4: Reserve		
			5: Frequency set by HDI pulse		
00-18	P.109	Second start signal selection	0: Start signal given by keypad	0	85
			1: Start signal given by digital input terminal		
			2: Start signal given by communication RS485		
			3: Start signal given by communication card(optional)		
00-19	P.35	Communication mode command source selection	0: In communication mode, start and frequency command is given by communication	0	85
			1: In communication mode, start and frequency command is given by external terminal		
00-21	P.300	Motor control mode selection	0: Induction motor V/F control	0	86
			1: Reserve		
			2: Induction motor simple vector control		
			3: Induction motor sensor less vector control		
			4~ 5: Reserve		
			6: Synchronous motor without PG vector control		
00-22	P.370	Second motor control mode selection	0: Induction motor V/F control	99999	86
			1: Reserve		
			2: Induction motor simple vector control		
			3: Induction motor sensor less vector control		
			4~ 5: Reserve		
			6: Synchronous motor without PG vector control		
			99999: Second motor control mode is not selected		
00-23	P.186	Duty types selection	0: Normal Duty (ND), on fan and pump duty type.	0	87
			1: Heavy Duty (HD), apply to other duties.		
00-24	P.189	50Hz/60Hz switch selection	0: 60Hz system default value for related parameters.	0	87
			1: 50Hz system default value for related parameters.	1	
00-25	P.990	Parameter mode setting	0: Parameter is displayed as “group mode”	0	88
			1: Parameter is displayed as “order number”		
00-26	P.125	Expansion card type	Read only	Read only	88
01-00	P.1	Maximum frequency	55K/45KF and types below: 0.00~01-02(P.18)Hz	120.00Hz	91
			75K/55KF and types above: 0.00~01-02(P.18)Hz	60.00Hz	
01-01	P.2	Minimum frequency	0 ~ 120.00Hz	0.00Hz	91
01-02	P.18	High-speed maximum frequency	01-00(P.1) ~ 650.00Hz	120.00Hz	91
01-03	P.3	Base frequency	50Hz system setting: 0 ~ 650.00Hz	50.00Hz	92
			60Hz system setting: 0 ~ 650.00Hz	60.00Hz	

Parameter group	Parameter number	Parameter name	Setting range	Default	Reference page
01-04	P.19	Base voltage	0 ~ 1000.0V	99999	92
			99999: Change according to the input voltage		
01-05	P.29	Acceleration/deceleration curve selection	0: Linear acceleration /deceleration curve	0	93
			1: S pattern acceleration /deceleration curve 1		
			2: S pattern acceleration /deceleration curve 2		
			3: S pattern acceleration /deceleration curve 3		
01-06	P.7	Acceleration time	0 ~ 360.00s/0 ~ 3600.0s	5.00s	93
01-07	P.8	Deceleration time	5.5K/3.7KG~7.5K/5.5KG types: 0 ~ 360.00s/0 ~ 3600.0s	10.00s	93
			11K/7.5KG and types above: 0~360.00s/0 ~ 3600.0s	30.00s	
01-08	P.21	Acceleration/deceleration time increments	0: Time increment is 0.01s	0	93
			1: Time increment is 0.1s		
01-09	P.20	Acceleration / deceleration reference frequency	50Hz system setting: 1.00 ~ 650.00Hz	50.00Hz	93
			60Hz system setting: 1.00 ~ 650.00Hz	60.00Hz	
01-10	P.0	Torque boost	5.5K/3.7KG~7.5K/5.5KG types: 0 ~ 30.0%	3.0%	95
			11K/7.5KG~55K/45KG types: 0 ~ 30.0%	2.0%	
			75K/55KG and types above: 0 ~ 30.0%	1.0%	
01-11	P.13	Starting frequency	0 ~ 60.00Hz	0.50Hz	96
01-12	P.14	Load pattern selection	0: Applicable to constant torque loads(conveyor belt, etc.)	0	96
			1: Applicable to variable torque loads (fans and pumps, etc.)		
			2,3: Applicable to ascending / descending loads		
			4: Multipoint VF curve		
			5 ~ 13: Special two-point VF curve		
			14: V/F complete detached mode		
			15: V/F semidetached mode		
01-13	P.15	JOG frequency	0 ~ 650.00Hz	5.00Hz	99
01-14	P.16	JOG acceleration/ deceleration time	0 ~ 360.00s/0 ~ 3600.0s	0.50s	99
01-15	P.28	Output frequency filter time	0 ~ 1000ms	0ms	100
01-16	P.91	Frequency jump 1A	0 ~ 650.00Hz	99999	100
			99999: invalid		
01-17	P.92	Frequency jump 1B	0 ~ 650.00Hz	99999	100
			99999: invalid		
01-18	P.93	Frequency jump 2A	0 ~ 650.00Hz	99999	100
			99999: invalid		
01-19	P.94	Frequency jump 2B	0 ~ 650.00Hz	99999	100
			99999: invalid		
01-20	P.95	Frequency jump 3A	0 ~ 650.00Hz	99999	100
			99999: invalid		
01-21	P.96	Frequency jump 3B	0 ~ 650.00Hz	99999	100
			99999: invalid		
01-22	P.44	Second acceleration time	0 ~ 360.00s/0 ~ 3600.0s	99999	101
			99999: Not selected		
01-23	P.45	Second deceleration time	0 ~ 360.00s/0 ~ 3600.0s	99999	101
			99999: Not selected		
01-24	P.46	Second torque boost	0 ~ 30.0%	99999	101
			99999: Not selected		
01-25	P.47	Second base frequency	0 ~ 650.00Hz	99999	101
			99999: Not selected		

Appendix 1: Parameter table

Parameter group	Parameter number	Parameter name	Setting range	Default	Reference page
01-26	P.98	Middle frequency 1	0 ~ 650.00Hz	3.00Hz	102
01-27	P.99	Middle voltage 1	0 ~ 100.0%	10.0%	102
01-28	P.162	Middle frequency 2	0 ~ 650.00Hz 99999: Not selected	99999	102
01-29	P.163	Middle voltage 2	0 ~ 100.0%	0.0%	102
01-30	P.164	Middle frequency 3	0 ~ 650.00Hz 99999: Not selected	99999	102
01-31	P.165	Middle voltage 3	0 ~ 100.0%	0.0%	102
01-32	P.166	Middle frequency 4	0 ~ 650.00Hz 99999: Not selected	99999	102
01-33	P.167	Middle voltage 4	0 ~ 100.0%	0.0%	102
01-34	P.168	Middle frequency 5	0 ~ 650.00Hz 99999: Not selected	99999	102
01-35	P.169	Middle voltage 5	0 ~ 100.0%	0.0%	102
01-36	P.255	S pattern time at the □beginning of acceleration	0 ~ 25.00s/0 ~ 250.0s	0.20s	103
01-37	P.256	S pattern time at the end of acceleration	0 ~ 25.00s/0 ~ 250.0s 99999: Not selected	99999	103
01-38	P.257	S pattern time at the □beginning of deceleration	0 ~ 25.00s/0 ~ 250.0s 99999: Not selected	99999	103
01-39	P.258	S pattern time at the end of acceleration	0 ~ 25.00s/0 ~ 250.0s 99999: Not selected	99999	103
01-40	P.219	Remote function acc/dec time selection	0: Use default acc/dec time（same as regular mode） 1: Use second acc/dec time	0	103
02-00	P.500	Function selection of terminal 2-5	0: Non-function 1: Frequency reference 2: Reserve 3: PID target value 4: PID feedback signal 5~ 10: Reserve 11：PTC 12：PT100 13: VF detached function	1	110
02-01	P.501	Function selection of terminal 4-5	Same as 02-00(P.500)	1	110
02-02	P.504	Function selection of terminal 3-5	Same as 02-00(P.500)	0	110
02-03	P.503	Function of terminal HDI	Same as 02-00(P.500)	0	110
02-04	P.54	Function of terminal AM1 output	0: Output frequency, the frequency display reference 02-51 (P.55) is 100%. 1: Output frequency, the frequency display reference 02-52 (P.56) is 100%. 2: Output DC bus voltage, the OV level is 100%.	0	111

Parameter group	Parameter number	Parameter name	Setting range	Default	Reference page
02-04	P.54	Function of terminal AM1 output	3: Output temperature rising accumulation rate of inverter, the NTC level is 100%.	0	111
			4: Output inverter electronic thermal rate, the electronic thermal relay running (06-00(P.9)≠0) or the electronic thermal relay of inverter's IGBT module running(06-00(P.9)=0) is 100%.		
			5: Target frequency, the frequency display reference 02-51(P.55) is 100%.		
			6: Fixed level output, voltage or current output level is set by 02-54(P.541)/02-53(P.539).		
			7: Output voltage, inverter rated voltage is 100%.		
			8: Excitation current, the motor rated current is 100%. (Valid only when 00-21(P.300) or 00-22(P.370) is set to 3~6).		
			9: Output torque, two times motor rated torque is 100%. (Valid only when 00-21(P.300) or 00-22(P.370) is set o 3~6).		
			10: Output power, two times motor rated power is 100%.		
			11: High-speed pulse, 100.00KHz is 100%.		
			12: Motor running speed to show that reference 02 - 51 (P.55) is 100%		
			13: PLC analog output		
02-05	P.537	Function of terminal AM1 output	6: Steady level output, voltage or current output level is set by 02-53(P.539).	0	111
			0~5, 7~13: Same as 02-04(P.54).		
02-06	P.185	Proportion linkage gain	0 ~ 100%	0%	111
02-07	P.240	Auxiliary frequency	0: No auxiliary frequency function is available.	0	112
			1: operation frequency = basic frequency + auxiliary frequency (given by 2-5 terminal)		
			2: operation frequency = basic frequency + auxiliary frequency (given by 4-5 terminal)		
			3: operation frequency = basic frequency - auxiliary frequency (given by 2-5 terminal)		
			4: operation frequency = basic frequency - auxiliary frequency (given by4-5 terminal)		
			5: operation frequency = given by terminal 2-5 as proportion linkage signal		
			6: operation frequency = given by terminal 4-5 as proportion linkage signal		
			7: operation frequency = given by the terminal 3-5 as the proportion linkage signal		
			8: operation frequency = basic frequency + auxiliary frequency (given by 3-5 terminal)		
			9: operation frequency = basic frequency - auxiliary frequency (given by 3-5 terminal)		

Appendix 1: Parameter table

Parameter group	Parameter number	Parameter name	Setting range	Default	Reference page
02-08	P.73	2-5 signal selection	0: Effective range of signal sampling is 0 ~ 5V.	1	113
			1: Effective range of signal sampling is 0 ~ 10V.		
			2:Effective range of signal sampling is 0 ~ - 5V.		
			3: Effective range of signal sampling is 0 ~ -10V.		
			4: Effective range of signal sampling is -5 ~ +5V.		
			5: Effective range of signal sampling is -10 ~ +10V.		
02-09	P.38	2-5 maximum operation frequency	50Hz system: 1.00 ~ 650.00Hz	50.00Hz	113
			60Hz system: 1.00 ~ 650.00Hz	60.00Hz	
02-10	P.60	2-5 filter time	0 ~ 2000ms	30ms	113
02-11	P.139	Bias rate of 2-5 voltage signal	-100.0%~100.0%	0.0%	113
02-12	P.192	Minimum input positive voltage of 2-5	0 ~ 10.00V	0.00V	113
02-13	P.193	Maximum input positive voltage of 2-5	0 ~ 10.00V	10.00V	113
02-14	P.194	Percentage correspond to minimum positive voltage of terminal 2-5	-100.0% ~ 100.0%	0.0%	113
02-15	P.195	Percentage correspond to maximum positive voltage of terminal 2-5	-100.0% ~ 100.0%	100.0%	113
02-16	P.512	Minimum input negative voltage of 2-5	0 ~ 10.00V	0.00V	113
02-17	P.513	Maximum input negative voltage of 2-5	0 ~ 10.00V	0.00V	113
02-18	P.510	Percentage correspond to minimum negative voltage of terminal 2-5	-100.0% ~ 100.0%	0.0%	113
02-19	P.511	Percentage correspond to maximum negative voltage of terminal 2-5	-100.0% ~ 100.0%	0.0%	113
02-20	P.17	4-5 signal selection	0: Effective range of signal sampling is 4~20mA.	0	119
			1: Effective range of signal sampling is 0 ~ 10V.		
			2: Effective range of signal sampling is 0 ~ 5V.		
02-21	P.39	Maximum operation frequency of terminal 4-5	50Hz system: 1.00 ~ 650.00Hz	50.00Hz	119
			60Hz system: 1.00 ~ 650.00Hz	60.00Hz	
02-22	P.528	4-5 filter time	0 ~ 2000ms	30ms	119
02-23	P.505	Bias rate of 4-5 current/voltage signal	-100.0% ~ 100.0%	0.0%	119
02-24	P.184	4-5 disconnection selection	0: No disconnection selection	0	119 119
			1: Decelerate to 0Hz, Multi-function digital output terminal will set off alarm.		
			2: Inverter will stop immediately, and keypad will display “AEr” alarm.		
			3: Inverter will run continuously according to the frequency reference before disconnection. Multi-function digital output terminal will set off alarm.		

Parameter group	Parameter number	Parameter name	Setting range	Default	Reference page
02-25	P.198	Minimum input current/voltage of terminal 4-5	0 ~ 20.00mA	4.00mA	119
02-26	P.199	Maximum input current/voltage of terminal 4-5	0 ~ 20.00mA	20.00mA	119
02-27	P.196	Percentage corresponding to minimum input current/voltage of terminal 4-5	-100.0% ~ 100.0%	0.0%	119
02-28	P.197	Percentage corresponding to maximum input current/voltage of terminal 4-5	-100.0% ~ 100.0%	100.0%	119
02-29	P.531	3-5 signal selection	0: Effective range of signal sampling is 4~20mA. 1: Effective range of signal sampling is 0~10V. 2: Effective range of signal sampling is 0 ~ 5V.	1	121
02-30	P.508	Maximum operation frequency of terminal 3-5	50Hz system: 1.00 ~ 650.00Hz 60Hz system: 1.00 ~ 650.00Hz	50.00Hz 60.00Hz	121
02-31	P.527	3-5 filter time	0 ~ 2000ms	30ms	121
02-32	P.507	Bias rate of 3-5 voltage signal	-100.0% ~ 100.0%	0.0%	121
02-33	P.545	3-5 disconnection selection	0: No disconnection selection 1: Decelerate to 0Hz; Multi-function digital output terminal will set off alarm. 2: Inverter will stop immediately, and keypad will display “AEr” alarm. 3: Inverter will run continuously according to frequency reference before the disconnection. Multi-function digital output terminal will set off alarm.	0	121
02-34	P.548	Minimum input current/voltage of terminal 3-5	0 ~ 10.00V	0.00V	121
02-35	P.549	Maximum input current/voltage of terminal 3-5	0 ~ 10.00V	10.00V	121
02-36	P.546	Percentage corresponding to minimum input current/voltage of terminal 3-5	-100.0% ~ 100.0%	0.0%	121
02-37	P.547	Percentage corresponding to maximum input current/voltage of terminal 3-5	-100.0% ~ 100.0%	100.0%	121
02-38	P.526	HDI filter time	0 ~ 2000ms	10ms	122
02-39	P.524	HDI input minimum frequency	0 ~ 100.00kHz	0.00kHz	122
02-40	P.525	HDI input maximum frequency	0 ~ 100.00kHz	100.00kHz	122
02-41	P.522	Percentage corresponding to HDI input minimum frequency	-100.0% ~ 100.0%	0.0%	122
02-42	P.523	Percentage corresponding to HDI input maximum frequency	-100.0% ~ 100.0%	100.0%	122
02-43	P.74	HDO frequency multiplication coefficient	0: Select FM function as output function of terminal HDO. 1 ~ 9000: Select square-wave pulse which is 02-43(P.74) times of running frequency as terminal output.	0	123

Parameter group	Parameter number	Parameter name	Setting range	Default	Reference page
02-44	P.543	FM output function selection	0: Output frequency, frequency display reference 02-51(P.55) is 100%.	0	123
			1: Output current, current monitoring reference 02-52(P.56) is 100%.		
			2: Output DC bus voltage, OV level is 100%.		
			3: Output temperature rising accumulation rate of inverter, the NTC level is 100%.		
			4: Output inverter electronic thermal rate: The electronic thermal relay running (when 06-00(P.9)≠0) or the electronic thermal relay of inverter's IGBT module running (when 06-00(P.9)=0) is 100%		
			5: Target frequency, frequency display reference02-51 (P.55) is 100%.		
			6: Fixed voltage output, voltage output level is set by 02-54 (P.541).		
			7: Output voltage, inverter rated voltage is 100%		
			8: Excitation current, motor rated current is100%. (Valid only when 00-21(P.300) or00-22(P.370) is set to 3~6)		
			9: Output torque, two times motor rated torque is 100%. (Valid only when 00-21(P.300) or 00-22(P.370) is set o 3~6)		
			10: Output power, two times motor rated power is 100%.		
			11: High-speed pulse, 100.00KHz is 100%.		
			12: Motor running speed, to show the reference 02 - 51 (P.55) is 100%		
02-45	P.64	AM1 output signal selection	0: output 0~10V voltage across AM1-5.	0	124
			1: Reserve		
			2: output 0~20mA current across AM1-5.		
			3: output 4~20mA current across AM1-5.		
02-46	P.191	AM1 output gain	0 ~ 150.00%	100.00%	124
02-47	P.190	AM1 output bias	0 ~ 150.00%	0.00%	124
02-48	P.538	AM1 output signal selection	Same as 02-45(P.64)	0	125
02-49	P.536	AM1 output gain	0 ~ 150.00%	100.00%	125
02-50	P.535	AM2 output bias	0 ~ 150.00%	0.00%	125
02-51	P.55	Frequency display reference at analog output	50Hz system: 0.00 ~ 650.00Hz	50.00Hz	126
			60Hz system: 0.00 ~ 650.00Hz	60.00Hz	
02-52	P.56	Current monitoring reference at analog output	0~500.00A: Types below Frame G	According to type	126
			0~5000.0A: Frame G and types above		
02-53	P.539	AM2 fixed output level	0 ~ 100.0%	0.0%	126
02-54	P.541	AM1/FM fixed output level	0 ~ 100.0%	0.0%	126

Parameter group	Parameter number	Parameter name	Setting range	Default	Reference page
02-55	P.592	PT100 voltage level 1	0 ~ 10.00V	5.00V	127
02-56	P.593	PT100 voltage level 2	0 ~ 10.00V	7.00V	127
02-57	P.594	PT100 level 1starting frequency	0 ~ 650.00Hz	0.00Hz	127
02-58	P.595	Starting PT100 level1 delay time	0 ~ 6000s	60s	127
02-59	P.187	FM calibration parameter	0 ~ 9998	450	127
03-00	P.83	STF function selection	0:STF (forward rotation of inverter) 1:STR (reverse rotation of inverter) 2:RL (multi-speed low speed) 3:RM (multi-speed medium speed) 4:RH (multi-speed high speed) 5:AU (Analog terminal 4-5 is preferred) 6: External thermal relay action 7:MRS (Inverter output stops immediately) 8: (the second function of inverter) 9:EXT (external jog) 10: STF+EXJ 11: STR+EXJ 12: STF+RT 13: STR+RT 14: STF+RL 15: STR+RL 16: STF+RM 17: STR+RM 18: STF+RH 19: STR+RH 20: STF+RL+RM 21: STR+RL+RM 22: STF+RT+RL 23: STR+RT+RL 24: STF+RT+RM 25: STR+RT+RM 26: STF+RT+RL+RM 27: STR+RT+RL+RM 28:RUN (forward rotation of motor) 29:STF/STR (cooperating with RUN signal, when STF/STR is “on”, the motor rotates reversely, while STF/STR is “off”, the motor rotates forward.) 30:RES (external Reset function) 31:STOP (cooperating with RUN signal, , STF/STR terminals can be combined into three-wire function.) 32:REX (combine multi-speed into 16 segment speed) 33:PO (In the external mode, select the program operation mode.)	0	134

Appendix 1: Parameter table

Parameter group	Parameter number	Parameter name	Setting range	Default	Reference page
03-00	P.83	STF function selection	34:RES_E (The external Reset signal is only valid when an alarm occurs.)	0	134
			35:MPO (Manual cycle function in external mode)		
			36:TRI (Triangular wave function)		
			37:GP_BP (Power frequency conversion switching function)		
			38:CS (Manually switch power frequency signals)		
			39:STF/STR +STOP (cooperating with RUN signal, when ON, the motor rotates reversely, while OFF, the motor stops and then rotates forward.)		
			40:P_MRS (Inverter output stops immediately, where MRS is the pulse signal input.)		
			41:PWM PWM set frequency (Note 1)		
			42: Reserve		
			43:RUN_EN (Enable digital input terminal operation)		
			44:PID_OFF Enable digital input terminal turning off PID		
			45: The second mode		
			46~56: Reserve		
			57: High-speed pulse input function (Note 1)		
			58: Analog terminal 2-5 is preferred		
			59: Analog terminal 3-5 is preferred		
			60: Start and stop of PLC		
			61~64: Reserve		
			65: Pause of external acceleration and deceleration		
			66: External forced stop		
			67~71: Reserve		
			72：Pump 1 manual soft start		
			73：Pump 2manual soft start		
			74：Pump 3 manual soft start		
			75：Pump 4 manual soft start		
			76：Pump 5 manual soft start		
			77：Pump 6 manual soft start		
			78：Pump 7 manual soft start		
			79：Pump 1 failure		
			80：Pump 2 failure		
			81：Pump 3 failure		
			82：Pump 4 failure		
			83：Pump 5 failure		
			84：Pump 6 failure		
			85：Pump 7failure		
			86：Failure of all pumps		
			87~89：reserved		
			90：Upper level of sump		
			91：Lower limit of sump water level		
			92：Fire mode command 1 (with run command)		
			93：Fire mode command 2 (without run command)		
			99999: This external terminal function is not selected.		
03-01	P.84	STR function selection	The same as 03-00(P.83)	1	134
03-02	P.86	RES function selection	The same as 03-00(P.83)	30	134
03-03	P.80	M0 function selection	The same as 03-00(P.83)	2	134
03-04	P.81	M1 function selection	The same as 03-00(P.83)	3	134
03-05	P.82	M2 function selection	The same as 03-00(P.83)	4	134

Parameter group	Parameter number	Parameter name	Setting range	Default	Reference page
03-06	P.126	M3 function selection	The same as 03-00(P.83)	5	136
03-07	P.127	M4 function selection	The same as 03-00(P.83)	8	136
03-08	P.128	M5 function selection	The same as 03-00(P.83)	7	136
03-09	P.550	HDI terminal function setting	The same as 03-00(P.83)	57	136
03-10	P.40	SO1-SE function selection	0:RUN (The inverter is running)	1	140
			1:SU (Output frequency arrival)		
			2:FU (Output frequency detection)		
			3:OL (Overload alarm)		
			4:OMD (Zero current detected)		
			5:ALARM (Alarm detected)		
			6:PO1 (Signal detected in program running segment)		
			7:PO2 (Signal detected during program operation cycle)		
			8:PO3 (Pause signal detected during program operation)		
			9:BP (Power frequency conversion switching, frequency conversion output)		
			10:GP (Power frequency conversion switching, power frequency output)		
			11:OMD1 (Zero current detected)		
			12：Pump 1 frequency conversion control		
			13：Pump 1 power frequency control		
			14：Pump 2 frequency conversion control		
			15：Pump 2 power frequency control		
			16: Reserve		
			17:RY (The inverter is ready for operation)		
			18: Maintenance alarm function detected		
			19:OL2 (Over torque alarm output)		
			20: Abnormal service life of capacitor		
			21~22: Reserve		
			23: Power off sign detected		
			24：Pump 3 frequency conversion control		
			25：Pump 3 power frequency control		
			26：Pump 4 frequency conversion control		
			27：Pump 4 power frequency control		
			28：Pump 5 frequency conversion control		
			29：Pump 5 power frequency control		
			30：Pump 6 frequency conversion control		
			31：Pump 6 power frequency control		
			32：Pump 7 frequency conversion control		
			33：Pump 7 power frequency control		
			34：Indication of dormant operation		
			35：Hydraulic overpressure indication		
			36：Underpressure indication of water pressure		
			37~38：reserved		
			39：Power frequency control of dormant pump(16-01(P.1001)~16-07(P.1007) have been set to sleep pump this function is invalid.)		
			40：Sewage pump power frequency control(16-01(P.1001)~16-07(P.1007) have been set to sleep pump this function is invalid.)		
			41：PID feedback line break (AEr) alarm		
			42：Fire mode indication		
			43：Fire mode bypass indication		

Appendix 1: Parameter table

Parameter group	Parameter number	Parameter name	Setting range	Default	Reference page
03-11	P.85	A1-B1-C1 function selection	The same as 03-10(P.40)	5	140
03-12	P.129	SO2-SE function selection	The same as 03-10(P.40)	2	140
03-13	P.130	A2-B2-C2 function selection	The same as 03-10(P.40)	0	140
03-14	P.87	Multi-function digital input terminal that inputs positive and negative logic	0~1023	0	142
03-15	P.88	The positive and negative logic of the multi-function digital output terminal	0~4095	0	142
03-16	P.120	Delay time of output signal	0~3600.0s	0.0s	143
03-17	P.157	Filtering time of the digital input terminal	0~2000ms	4ms	143
03-18	P.158	Enable digital input terminal power-on	0: Not enable digital input terminal power-on 1: Enable digital input terminal power-on	0	144
03-20	P.41	Output frequency detection range	0~100.0%	10.0%	144
03-21	P.42	Forward rotation output frequency detected	0~650.00Hz	6.00Hz	144
03-22	P.43	Reverse rotation output frequency detected	0~650.00Hz 99999: the same as the setting of 03-21(P.42)	99999	144
03-23	P.62	Zero current detected level	0~200.0% 99999: Invalid function	5.0%	145
03-24	P.63	Zero current detected time	0~100.00s 99999: Invalid function	0.50s	145
03-25	P.551	Digital input terminal M10	The same as 03-00(P.83)	99999	146
03-26	P.552	Digital input terminal M11	The same as 03-00(P.83)	99999	146
03-27	P.553	Digital input terminal M12	The same as 03-00(P.83)	99999	146
03-28	P.554	Digital input terminal M13	The same as 03-00(P.83)	99999	146
03-29	P.555	Digital input terminal M14	The same as 03-00(P.83)	99999	146
03-30	P.556	Digital input terminal M15	The same as 03-00(P.83)	99999	146
03-41	P.567	The positive and negative logic of the external digital input terminal	0~65535	0	147
03-42	P.568	Digital output terminal A10	The same as 03-10(P.40)	99999	147
03-43	P.569	Digital output terminal A11	The same as 03-10(P.40)	99999	147
03-44	P.570	Digital output terminal A12	The same as 03-10(P.40)	99999	147
03-45	P.571	Digital output terminal A13	The same as 03-10(P.40)	99999	147
03-46	P.572	Digital output terminal A14	The same as 03-10(P.40)	99999	147
03-47	P.573	Digital output terminal A15	The same as 03-10(P.40)	99999	147
03-48	P.574	Digital output terminal A16	The same as 03-10(P.40)	99999	147
03-49	P.575	Digital output terminal A17	The same as 03-10(P.40)	99999	147
03-59	P.585	Monitor digital input terminal signal status on inverter	Read only	Read only	148
03-60	P.586	Monitor digital output terminal signal status on and external of inverter	Read only	Read only	148
03-61	P.587	Monitor external digital input terminal signal status	Read only	Read only	148

Parameter group	Parameter number	Parameter name	Setting range	Default	Reference page
04-00	P.4	Speed 1 (high speed)	0~650.00Hz	60.00Hz	152
04-01	P.5	Speed 2 (medium speed)	0~650.00Hz	30.00Hz	152
04-02	P.6	Speed 3 (low speed)	0~650.00Hz	10.00Hz	152
04-03	P.24	Speed 4	0~650.00Hz 99999: Invalid function	99999	152
04-04	P.25	Speed 5	The same as 04-03(P.24)	99999	152
04-05	P.26	Speed 6	The same as 04-03(P.24)	99999	152
04-06	P.27	Speed 7	The same as 04-03(P.24)	99999	152
04-07	P.142	Speed 8	The same as 04-03(P.24)	99999	152
04-08	P.143	Speed 9	The same as 04-03(P.24)	99999	152
04-09	P.144	Speed 10	The same as 04-03(P.24)	99999	152
04-10	P.145	Speed 11	The same as 04-03(P.24)	99999	152
04-11	P.146	Speed 12	The same as 04-03(P.24)	99999	152
04-12	P.147	Speed 13	The same as 04-03(P.24)	99999	152
04-13	P.148	Speed 14	The same as 04-03(P.24)	99999	152
04-14	P.149	Speed 15	The same as 04-03(P.24)	99999	152
04-15	P.100	Selection of minute or second	0: select minute as the time increment 1: select second as the time increment	1	154
04-16	P.121	Running direction of each speed segment	0~255	0	154
04-17	P.122	Cyclical selection	0: No cycle 1~8: Start cycle from the set segment	0	154
04-18	P.123	Selection of acceleration and deceleration time	0: The acceleration time is determined by the set value of 01-06 (P.7) and deceleration time is determined by the set value of 01-07 (P.8) 1: the acceleration time and deceleration time are both determined by 04-35 (P.111)~04-42 (P.118)	0	154
04-19	P.131	Programmed operation mode speed 1	0~650.00Hz	0.00 Hz	154
04-20	P.132	Programmed operation mode speed 2	0~650.00Hz	0.00 Hz	154
04-21	P.133	Programmed operation mode speed 3	0~650.00Hz	0.00 Hz	154
04-22	P.134	Programmed operation mode speed 4	0~650.00Hz	0.00 Hz	154
04-23	P.135	Programmed operation mode speed 5	0~650.00Hz	0.00 Hz	154
04-24	P.136	Programmed operation mode speed 6	0~650.00Hz	0.00 Hz	154
04-25	P.137	Programmed operation mode speed 7	0~650.00Hz	0.00 Hz	154
04-26	P.138	Programmed operation mode speed 8	0~650.00Hz	0.00 Hz	154
04-27	P.101	Running time of programmed operation mode speed 1	0~6000.0s	0.0s	154
04-28	P.102	Running time of programmed operation mode speed 2	0~6000.0s	0.0s	154
04-29	P.103	Running time of programmed operation mode speed 3	0~6000.0s	0.0s	154
04-30	P.104	Running time of programmed operation mode speed 4	0~6000.0s	0.0s	154
04-31	P.105	Running time of programmed operation mode speed 5	0~6000.0s	0.0s	154

Appendix 1: Parameter table

Parameter group	Parameter number	Parameter name	Setting range	Default	Reference page
04-32	P.106	Running time of programmed operation mode speed 6	0~6000.0s	0.0s	154
04-33	P.107	Running time of programmed operation mode speed 7	0~6000.0s	0.0s	154
04-34	P.108	Running time of programmed operation mode speed 8	0~6000.0s	0.0s	155
04-35	P.111	Acceleration and deceleration time of programmed operation mode speed 1	0~600.00s/0~6000.0s	0.00s	155
04-36	P.112	Acceleration and deceleration time of programmed operation mode speed 2	0~600.00s/0~6000.0s	0.00s	155
04-37	P.113	Acceleration and deceleration time of programmed operation mode speed 3	0~600.00s/0~6000.0s	0.00s	155
04-38	P.114	Acceleration and deceleration time of programmed operation mode speed 4	0~600.00s/0~6000.0s	0.00s	155
04-39	P.115	Acceleration and deceleration time of programmed operation mode speed 5	0~600.00s/0~6000.0s	0.00s	155
04-40	P.116	Acceleration and deceleration time of programmed operation mode speed 6	0~600.00s/0~6000.0s	0.00s	155
04-41	P.117	Acceleration and deceleration time of programmed operation mode speed 7	0~600.00s/0~6000.0s	0.00s	155
04-42	P.118	Acceleration and deceleration time of programmed operation mode speed 8	0~600.00s/0~6000.0s	0.00s	155
05-00	P.301	Automatic measurement of motor parameters	0: No motor parameter automatic measurement function 1: Automatic measurement of induction motor parameters, during which the motor is running. 2: Automatic measurement of induction motor parameters, during which the motor is not running. 3: On-line automatic measurement function of induction motor 5: Automatic measurement of induction motor parameters, during which the motor is not running. 8: Automatic measurement of synchronous motor parameters	0	160
05-01	P.302	Rated power of motor	0~650.00kW	0.00kW	162
05-02	P.303	Pole number of motor	0~256	4	162
05-03	P.304	Rated voltage of motor	440 voltage range	440V	162

Parameter group	Parameter number	Parameter name	Setting range	Default	Reference page
05-04	P.305	Rated frequency of motor	50Hz system setting: 0~650.00Hz	50.00Hz	162
			60Hz system setting: 0~650.00Hz	60.00Hz	
05-05	P.306	Rated current of motor	0~500.00A : Types below Frame G	According to type	162
			0~5000.0A: Frame G and types above		
05-06	P.307	Rated rotation speed of motor	50Hz system setting: 0~65000r/min	1410r/min	162
			60Hz system setting: 0~65000r/min	1710r/min	
05-07	P.308	Excitation current of motor	0~500.00A: Types below Frame G	According to type	162
			0~5000.0A: Frame G and types above		
05-08	P.309	IM motor stator resistance	0~65000mΩ: 55K/45KG and types below	According to type	162
			0~650.00mΩ: 75K/55KG and types above		
05-09	P.310	IM motor rotor resistance	0~65000mΩ: 55K/45KG and types below	According to type	162
			0~650.00mΩ: 75K/55KG and types above		
05-10	P.311	IM motor leakage inductance	0~6500.0mH: 55K/45KG and types below	According to type	162
			0~650.00mH: 75K/55KG and types above		
05-11	P.312	IM motor mutual inductance	0~6500.0mH: 55K/45KG and types below	According to type	162
			0~650.00mH: 75K /55KG and types above		
05-12	P.313	PM motor stator resistance	0~65000mΩ: 55K/45KG and types below	According to type	162
			0~650.00mΩ: 75K/55KG and types above		
05-13	P.314	PM motor d-axis inductance	0~650.00mH	According to type	162
05-14	P.315	PM motor q-axis inductance	0~650.00mH	According to type	162
05-15	P.316	PM motor Back-EMF coefficient	0~6500.0V/krpm	According to type	162
05-17	P.318	Rotary inertia	0~6.5000kg.m2: 7.5K/5.5KG and types below	According to type	162
			0~65.000kg.m2: 11K/7.5KG~110K/ 90KG types		
			0~650.00kg.m2: 132K/110KG and types above		
05-18	P.319	Load inertia ratio	0~600.0	1.0	162
05-22	P.332	Rated power of motor 2	0~650.00kW	99999	163
			99999		
05-23	P.333	Pole number of motor 2	0~256	99999	163
			99999		
05-24	P.334	Rated voltage of motor 2	440 voltage range	99999	163
			99999		
05-25	P.335	Rated frequency of motor 2	0~650.00Hz	99999	163
			99999		
05-26	P.336	Rated current of motor 2	0~500.00A:Types below Frame G	99999	163
			0~5000.0A: Frame G and types above		
			99999		
05-27	P.337	Rated rotation speed of motor Rated rotation speed of motor 2	0~65000r/min	99999	164
			99999		
05-28	P.338	Excitation current of motor 2	0~500.00A: Types below Frame G	99999	164
			0~5000.0A: Frame G and types above		
			99999		
05-29	P.339	(IM) stator resistance of motor 2	0~65000mΩ: 55K/45KG and types below	99999	164
			0~650.00mΩ: 75K/55KG and types above		
			99999		
05-30	P.340	(IM) rotor resistance of motor 2	0~65000mΩ: 55K/45KG and types below	99999	164
			0~650.00mΩ: 75K/55KG and types above		
			99999		

Appendix 1: Parameter table

Parameter group	Parameter number	Parameter name	Setting range	Default	Reference page
05-31	P.341	(IM) leakage inductance of motor 2	0~6500.0mH: 55K/45KG and types below 0~650.00mH: 75K/55KG and types above 99999	99999	164
05-32	P.342	(IM) mutual inductance of motor 2	0~6500.0mH: 55K/45KG and types below 0~650.00mH: 75K/55KG and types above 99999	99999	164
05-33	P.343	(PM) stator resistance of motor 2	0~65000mΩ: 55K/45KG and types below 0~650.00mΩ: 75K/55KG and types above 99999	99999	164
05-34	P.344	(PM) stator resistance of motor 2	0~650.00mH 99999	99999	164
05-35	P.345	(PM) stator resistance of motor 2	0~650.00mH 99999	99999	164
05-36	P.346	(PM) Back-EMF coefficient of motor 2	0~6500.0V/krpm 99999 99999	99999	164
05-38	P.394	Inertia of motor 2	0~6.5000kg.m²: 7.5K/5.5KG and types below 0~65.000kg.m²: 11K/7.5KG~110K/ 90KG types 0~650.00kg.m²: 132K/110KG and types above 99999	99999	164
05-39	P.395	Load inertia ratio of motor 2	0~600.0 99999	99999	164
06-00	P.9	Electronic thermal relay capacity	0~500.00A: Types below frame G 0~5000.0A: Frame G and types above	According to type	169
06-01	P.22	Stall prevention operation level	0~200.0%	120.0%	169
06-02	P.23	Level reduction correction factor	0~150.0% 99999: stall prevention level is set value of 06-01 (P.22)	99999	169
06-03	P.66	Stall prevention operation reduction starting frequency	50Hz system setting: 0~650.00Hz 60Hz system setting: 0~650.00Hz	50.00Hz 60.00Hz	169
06-04	P.220	Selection of acceleration and deceleration time when current stalling	0: According to the current acceleration and deceleration time 1: According to the first acceleration and deceleration time 2: According to the second acceleration and deceleration time 3: Automatically calculate the best acceleration and deceleration time	3	169
06-05	P.30	Function selection of regenerative braking	0: The usage rate of regenerative braking is fixed at 3%, and parameter 06-06(P.70) is invalid 1: The usage rate of regenerative braking is the set value of 06-06(P.70) 2: Protection function of external brake unit (D frame and above)	0 2	171
06-06	P.70	Special regenerative braking rate	0~100.0%	0.0%	171
06-07	P.263	Decrease carrier protection setting	0: Fixed carrier frequency, and limit the load current according to the set carrier. 1: Fixed rated current, and limit the carrier according to the load current and temperature.	0	171
06-08	P.155	Over torque detection level	0~200.0%	0.0%	173
06-09	P.156	Over torque detection time	0.1~60.0s	1.0s	173

Parameter group	Parameter number	Parameter name	Setting range	Default	Reference page
06-10	P.260	Action selection of over torque detection	0: OL2 alarm will not be reported after over torque detection, and operation will continue 1: OL2 alarm will be reported after over torque detection, and operation will stop	1	173
06-11	P.160	Stall level when restart	0~150.0%	100.0%	173
06-12	P.245	Cooling fan operation mode	0: When running, the fan is ON, and after stopping for 30S, the fan is OFF 1: When power-on, the fan is always ON, and when power-off, the fan is OFF 2: During operation, if the heat sink temperature is greater than 60℃, the fan is ON; If less than 40℃, the fan is OFF;; When stopped, the fan is OFF 3: If the temperature value of the heat sink is greater than 60℃, the fan is ON; If it is less than 40℃, the fan is OFF.	0	174
06-13	P.281	Input phase failure protection	0: No input phase failure protection function 1: If the input phase fails, the keypad displays “IPF” alarm, and the inverter stops outputting	0	174
06-14	P.287	SCP short circuit protection function	0: No output side short-circuit protection function 1: If the output side is short-circuited, the keypad displays “SCP” alarm, and the inverter stops outputting	1	175
06-15	P.533	PTC alarm handling Mode	0: Warning and continue operation 1: Give abnormal warning and slow down to stop 2: Give alarm and stop freely 3: No warning	0	175
06-16	P.534	PTC level percentage	0~100.0%	0.0%	175
06-17	P.261	Maintenance alarm function	0: No maintenance alarm function 1 ~ 9998day: used to set the time for maintenance alarm output signal	0	176
06-19	P.282	GF detection level in operation	315K/280KG and types below: 0~100.0% 355K/315KG types: 0~100.0%	50.0% 70.0%	176
06-20	P.262	Output phase failure protection	0: No output phase failure protection 1: If the input phase fails, the keypad displays “LF” alarm, and the inverter stops outputting	0	176
06-21	P.705	Low voltage level	310~440V: 440V type	310V	177
06-22	P.706	Regenerative brake operation level	410~800V: 440V type	720V	177
06-23	P.707	Voltage stall level	410~800V: 440V type	760V	177
06-24	P.708	Capacitor lifetime detection	0~1	0	178
06-25	P.709	Electrolytic capacitor lifetime detection level	0~100.0%	100.0%	178
06-26	P.710	Electrolytic capacitor lifetime detection result	0: No abnormal 1: Abnormal electrolytic capacitance	Read only	178
06-27	P.292	Total inverter operation time (minutes)	0~1439min	0min	179

Appendix 1: Parameter table

Parameter group	Parameter number	Parameter name	Setting range	Default	Reference page
06-28	P.293	Total inverter operation time (days)	0~9999day	0 day	179
06-29	P.296	Total inverter power on time (minutes)	0~1439min	0 min	179
06-30	P.297	Total inverter power on time (days)	0~9999day	0 day	179
06-31	P.298	Output power (lower 16 bits)	Read only	Read only	179
06-32	P.299	Output power (higher 16 bits)	Read only	Read only	179
06-40	P.288	Alarm code query	0~12	1	180
06-41	P.289	Alarm code display	Read only	Read only	180
06-42	P.290	Alarm message query	0~10	0	180
06-43	P.291	Alarm message display	Read only	Read only	180
06-44	P.740	E1	Read only	Read only	181
06-45	P.741	E2	Read only	Read only	181
06-46	P.742	E3	Read only	Read only	181
06-47	P.743	E4	Read only	Read only	181
06-48	P.744	E5	Read only	Read only	181
06-49	P.745	E6	Read only	Read only	181
06-50	P.746	E7	Read only	Read only	181
06-51	P.747	E8	Read only	Read only	181
06-52	P.748	E9	Read only	Read only	181
06-53	P.749	E10	Read only	Read only	181
06-54	P.750	E11	Read only	Read only	181
06-55	P.751	E12	Read only	Read only	181
06-56	P.752	Output frequency during E1 alarm	Read only	Read only	182
06-57	P.753	Output current during E1 alarm	Read only	Read only	182
06-58	P.754	Output voltage during E1 alarm	Read only	Read only	182
06-59	P.755	Temperature rising accumulation rate during E1 alarm	Read only	Read only	182
06-60	P.756	PN voltage during E1 alarm	Read only	Read only	182
06-61	P.757	Total inverter operation time during E1 alarm	Read only	Read only	182
06-62	P.758	Inverter operation status code during E1 alarm	Read only	Read only	182
06-63	P.759	E1 alarm date (years/months)	Read only	Read only	182
06-64	P.760	E1 alarm date (days/hours)	Read only	Read only	182
06-65	P.761	E1 alarm date (minutes/seconds)	Read only	Read only	182
06-70	P.766	Output frequency during E2 alarm	Read only	Read only	183
06-71	P.767	Output current during E2 alarm	Read only	Read only	183
06-72	P.768	Output voltage during E2 alarm	Read only	Read only	183
06-73	P.769	Temperature rising accumulation rate during E2 alarm	Read only	Read only	183
06-74	P.770	PN voltage during E2 alarm	Read only	Read only	183

Parameter group	Parameter number	Parameter name	Setting range	Default	Reference page
06-75	P.771	Total inverter operation time during E2 alarm	Read only	Read only	183
06-76	P.772	Inverter operation status code during E2 alarm	Read only	Read only	183
06-77	P.773	E2 alarm date (years/months)	Read only	Read only	183
06-78	P.774	E2 alarm date (days/hours)	Read only	Read only	183
06-79	P.775	E2 alarm date (minutes/seconds)	Read only	Read only	183
06-84	P.1040	Fire mode	XXX0: Off (fire mode off (normal mode) XXX1: Forward operation (inverter runs forward in fire mode) XXX2: Reverse operation (inverter runs reverse in fire mode) XX0X: Bypass off (close bypass function) XX1X: Bypass on (enable bypass function) X0XX: Open loop control (inverter will speed up to fire mode frequency 06-85 (P.1041)) X1XX: Closed loop control (run in PID, PID target set in 06-87 (P.1043)) 0XXX: Manual exit fire mode (after the fire mode terminal function is off, manually reset inverter to go to normall mode) 1XXX: Auto exit fire mode (after the fire mode terminal function is off, inverter automatically return to normal mode)	0	184
06-85	P.1041	Fire mode frequency	0~650.00Hz	60.00Hz	184
06-86	P.1042	Fire mode bypass delay	0.0~6000.0s	0.0s	184
06-87	P.1043	Fire mode PID target	0~08-43(P.251)	0.0	184
06-88	P.1044	Fire mode cumulate times	Read only	Read only	184
07-00	P.33	COM1 communication protocol selection	0: Modbus protocol 1: Shihlin protocol 2: PLC protocol (Effective when using Shihlin built-in PLC -)	1	190
07-01	P.36	COM1 inverter communication station number	0~254	0	190
07-02	P.32	COM1 serial communication baud rate	0: baud rate is 4800bps 1: baud rate is 9600bps 2: baud rate is 19200bps 3: baud rate is 38400bps 4: baud rate is 57600bps 5: baud rate is 115200bps	1	190
07-03	P.48	COM1 data length	0: 8bit 1: 7bit	0	190
07-04	P.49	COM1 stop bit length	0: 1bit 1: 2bit	0	190
07-05	P.50	COM1 parity check selection	0: No parity check 1: Odd check 2: Even check	0	190
07-06	P.51	COM1 CR/LF selection	1: CR only 2: Both CR and LF are available	1	190

Appendix 1: Parameter table

Parameter group	Parameter number	Parameter name	Setting range	Default	Reference page
07-07	P.154	COM1 Modbus communication format	0: 1,7,N,2 (Modbus, ASCII) 1: 1,7,E,1 (Modbus, ASCII) 2: 1,7,O,1 (Modbus, ASCII) 3: 1,8,N,2 (Modbus, RTU) 4: 1,8,E,1 (Modbus, RTU) 5: 1,8,O,1 (Modbus, RTU)	4	190
07-08	P.52	COM1 communication abnormal allowable times	0~10	1	190
07-09	P.53	COM1 communication interval allowed time	0~999.8s: Checking communication timeout with the set value 99999: No timeout check	99999	190
07-10	P.153	COM1 communication error handling	0: Alarm and idling and stopping 1: No alarm and continuing to operation	1	190
07-11	P.34	Communication EEPROM write-in selection	0: When writing parameters in communication mode, write in RAM and EEPROM 1: When writing parameters through communication, only write into RAM	0	205
07-15	P.800	CANopen slave address	0~127	0	205
07-16	P.801	CANopen rate	0: 1Mbps 1: 500Kbps 2: 250K/280KFbps 3: 125Kbps 4: 100Kbps 5: 50 Kbps	0	205
07-17	P.802	CANopen communication status	0: Node retry status 1: Communication retry status 2: Retry completion status 3: Pre-operation status 4: Operating status 5: Stop status	0	205
07-18	P.803	CANopen control status	0: Boot not completed status 1: Forbidden operation state 2: Pre-excitation status 3: Excitation state 4: Allowed operating status 7: Quick action stop status 13: Trigger error action status 14: Error status	0	205
07-25	P.810	PU communication protocol selection	0: Modbus protocol 1: Shihlin protocol 2: PLC protocol (Effective when using Shihlin built-in PLC)	1	190
07-26	P.811	PU inverter communication station number	0~254	0	190
07-27	P.812	PU serial communication baud rate	0: baud rate is 4800bps 1: baud rate is 9600bps 2: baud rate is 19200bps 3: baud rate is 38400bps 4: baud rate is 57600bps 5: baud rate is 115200bps	1	190
07-28	P.813	PU data length	0: 8bit 1: 7bit	0	190
07-29	P.814	PU stop bit length	0: 1bit 1: 2bit	0	190
07-30	P.815	PU parity check selection	0: No parity check 1: Odd check 2: Even check	0	191

Parameter group	Parameter number	Parameter name	Setting range	Default	Reference page
07-31	P.816	PU CR/LF selection	1: CR only 2: Both CR and LF are available	1	191
07-32	P.817	PU Modbus communication format	0: 1,7,N,2 (Modbus, ASCII) 1: 1,7,E,1 (Modbus, ASCII) 2: 1,7,O,1 (Modbus, ASCII) 3: 1,8,N,2 (Modbus, RTU) 4: 1,8,E,1 (Modbus, RTU) 5: 1,8,O,1 (Modbus, RTU)	4	191
07-33	P.818	PU communication abnormal allowable times	0~10	1	191
07-34	P.819	PU communication interval allowed time	0~999.8s: Checking communication timeout with the set value 99999: No timeout check	99999	191
07-35	P.820	PU communication error handling	0: Alarm and idling and stopping 1: No alarm and continuing to operation	1	191
07-41	P.826	Communication abnormal allowable times of communication card (optional)	0~10	1	191
07-42	P.827	Communication error handling of communication card (optional)	0: Alarm and idling and stopping 1: No alarm and continuing to operation	1	191
07-43	P.828	Communication interval allowed time of communication card (optional)	0~999.8s: Checking communication timeout with the set value 99999: No timeout check	99999	191
07-44	P.829	Version of EP301 communication card (optional)	Read only	Read only	206
07-45	P.830	IP configuration	0: Static IP 1: Dynamic IP	0	206
07-46	P.831	IP address 1	0~255	192	206
07-47	P.832	IP address 2	0~255	168	206
07-48	P.833	IP address 3	0~255	2	206
07-49	P.834	IP address 4	0~255	102	206
07-50	P.835	Subnet mask 1	0~255	255	206
07-51	P.836	Subnet mask 2	0~255	255	206
07-52	P.837	Subnet mask 3	0~255	255	206
07-53	P.838	Subnet mask 4	0~255	0	206
07-54	P.839	Default gateway 1	0~255	192	206
07-55	P.840	Default gateway 2	0~255	168	206
07-56	P.841	Default gateway 3	0~255	2	206
07-57	P.842	Default gateway 4	0~255	100	206
08-00	P.170	PID function selection	0: No PID function selected 0X: Setting target value of parameter 08-03 (P.225) 1X: Terminal 2-5 input as the target source 2X: Terminal 4-5 input as the target source 3X: Terminal 3-5 input as the target source 4X: Terminal HDI input as the target source X1: Terminal 2-5 input as feedback source X2: Terminal 4-5 input as feedback source X3: Terminal 3-5 input as feedback source	0	211
08-01	P.171	PID feedback control mode	0: PID negative action 1: PID positive action	0	211
08-02	P.241	PID sampling period	0~60000ms	20ms	212

Appendix 1: Parameter table

Parameter group	Parameter number	Parameter name	Setting range	Default	Reference page
08-03	P.225	PID target value panel reference	0~08-43(P.251)	20.0%	212
08-04	P.172	Proportional gain	0.1%~1000.0%	20.0%	212
08-05	P.173	Integral time	0~60.00s	1.00s	212
08-06	P.174	Differential time	0~10000ms	0ms	212
08-07	P.175	Abnormal deviation	0~100.0%	0.0%	212
08-08	P.176	Abnormal duration time	0~600.0s	30.0s	212
08-09	P.177	Abnormal processing mode	0: Stop freely 1: Slow down to stop 2: Alarm and continue operation	0	212
08-10	P.178	Sleep detection deviation	0~100.0%	0.0%	212
08-11	P.179	Sleep detection duration time	0~255.0s	1.0s	212
08-12	P.180	Wake-up level	0~100.0%	90.0%	212
08-13	P.181	Stop level	0~120.00Hz	40.00Hz	212
08-14	P.182	Upper integral limit	0~200.0%	100.0%	212
08-15	P.183	Deceleration step length when stable	0~10.00Hz	0.50Hz	212
08-16	P.221	Lower limit of pressure sampling value	0~65535	0	212
08-17	P.222	Upper limit pressure sampling value	0~65535	0	212
08-18	P.223	Analog feedback signal bias	0~100.0%	0.0%	212
08-19	P.224	Analog feedback signal gain	0~100.0%	100.0%	212
08-20	P.641	Proportional gain P2	0.1%~1000.0%	20.0%	216
08-21	P.642	Integral time I2	0~60.00s	1.00s	216
08-22	P.643	Differential time D2	0~10000ms	0ms	216
08-24	P.711	PID target filtering time	0~650.00s	0.00s	216
08-25	P.712	PID feedback filtering time	0~60.00s	0.00s	216
08-26	P.713	PID output filtering time	0~60.00s	0.00s	216
08-27	P.714	PID bias control limit	0~100.00%	0.00%	217
08-28	P.715	Integral separation attribute	0: No integral separation 1: Integral separation	0	217
08-29	P.716	Integral separation point	0~100.00%	50.00%	217
08-30	P.717	PID differential limit	0~100.00%	0.10%	217
08-31	P.718	PID output positive deviation limit	0~100.00%	100.00%	218
08-32	P.719	PID output negative deviation limit	0~100.00%	100.00%	218
08-33	P.720	PID parameter switchover operation selection	0: No PID parameter switchover 1: PID parameter switchover by deviation	0	218
08-34	P.721	PID parameter switchover deviation lower limit	0~100.00%	20.00%	218

Parameter group	Parameter number	Parameter name	Setting range	Default	Reference page
08-35	P.722	PID parameter switchover deviation upper limit	0~100.00%	80.00%	218
08-36	P.723	PID disconnection operation option 1	0: Select no need to run to the upper limit when PID is disconnected	1	219
			1: Select the need to run to the upper limit when PID is disconnected		
08-39	P.726	PID shutdown operation action selection	0: PID shutdown without operation	0	219
			1: PID shutdown with operation		
08-40	P.727	PID allowed reverse rotation action selection	0: PID does not allow reverse rotation	0	219
			1: PID allows reverse rotation		
08-41	P.728	PID negative integral limit	0~100.0%	0.0%	219
08-42	P.729	PID minimum output frequency	0~10.00Hz	0.00Hz	219
08-43	P.251	PID pressure range (Bar) setting	1.0~100.0	100.0	220
08-44	P.252	PID unit selection	0: %	0	220
			1: bar		
			2: empty		
			3: kgs		
			4: kg		
			5: psi		
			6: Pa		
			7: kPa		
			8: MPa		
			9: C		
08-45	P.253	Analog signal feedback loss detection time	0.0~600.0s	0.0s	220
08-46	P.254	Analog signal feedback loss action selection	0: Alarm AErr and inverter stop freely	0	220
			1: Slow down to stop then alarm AErr		220
			2: Alarm AErr and continue operation		220
10-00	P.10	DC brake operating frequency	0~120.00Hz	3.00Hz	225
10-01	P.11	DC brake operating time	0~60.0s	0.5s	225
10-02	P.12	DC brake operating voltage	0 ~ 30.0% : 7.5K/5.5KG and below types	4.0%	225
			0 ~ 30.0% : 11K/7.5KG ~ 55K/45KG types	2.0%	
			0 ~ 30.0% : 75K/55KG and above types	1.0%	
10-03	P.151	Zero-speed control function selection	0: No output at zero-speed	0	226
			1: Perform DC voltage brake at VF control (00-21(P.300)/00-22(P.370)=0)		
10-04	P.152	Voltage at zero-speed control	0 ~ 30.0% : 7.5K/5.5KG and below types	4.0%	226
			0 ~ 30.0% : 11K/7.5KG ~ 55K/45KG types	2.0%	
			0 ~ 30.0% : 75K/55KG and above types	1.0%	

Appendix 1: Parameter table

Parameter group	Parameter number	Parameter name	Setting range	Default	Reference page
10-05	P.242	Start DC brake function	0: No DC brake before start function	0	227
			1: Having DC brake before start function		
10-06	P.243	Start DC brake time	0~60.0s	0.5s	227
10-07	P.244	Start DC brake voltage	0 ~ 30.0%: 7.5K/5.5KG (inclusive) and below types	4.0%	227
			0 ~ 30.0%: 11K/7.5KG ~ 55K/45KG types	2.0%	
			0 ~ 30.0%: 75K/55KG (inclusive) and above types	1.0%	
10-08	P.150	Start mode selection	XX0: No frequency search	0	228
			XX1: Direct frequency search		
			XX2: Voltage reduction mode		
			X0X: Power on once		
			X1X: Every start		
			X2X: Sudden stop and restart only		
			0XX: No rotation direction detection		
			1XX: Rotation direction detection		
			2XX: 00-15(P.78) =0, Rotation direction detection; 00-15(P.78)=1/2, No rotation direction detection		
10-09	P.57	Restart idling time	0~30.0s	99999	228
			99999: No restart function		
10-10	P.58	Restart rising time	0 ~ 60.0s: 7.5K/5.5KG (inclusive) and below types	5.0s	228
			0 ~ 60.0s: 11K/7.5KG ~ 55K/45KG types	10.0s	
			0 ~ 60.0s: 75K/55KG (inclusive) and above types	20.0s	
10-11	P.61	Remote control function	X0: No remote control function	0	230
			X1: Remote control function, memorable frequency		
			X2: Remote control function, unmemorable frequency		
			X3: Remote control function, unmemorable frequency, STF/STR “turn off” will clear remote control set frequency		
			X4：Remote control function, frequency save in memory every 5s		
			1X：Frequency command range 01-01(P.2)~01-00(P.1), frequency commandvalue from RH,RM setting		
10-12	P.65	Retry function selection	0: No retry function	0	233
			1: Overvoltage occurring, the inverter performs retry function		
			2: Overcurrent occurring, the inverter performs retry function		
			3: Overvoltage or overcurrent occurring, the inverter performs retry function		
			4: All alarms have retry function		
10-13	P.67	Reset times at abnormal	0: No retry function	0	233
			1~10: If the continuous alarm exceeds the set value of 10-13 (P.67), the inverter will no longer perform the retry function		
10-14	P.68	Reset execution waiting time	0~360.0s	1.0s	233
10-15	P.69	Alarm reset cumulative times	Read only	0	233

Parameter group	Parameter number	Parameter name	Setting range	Default	Reference page
10-16	P.119	The dead time of positive and reverse rotation	0~3000.0s	0.0s	234
10-17	P.159	Energy saving control	0: Normal operation mode 1: Energy-saving operation mode	0	234
10-18	P.229	Dwell function selection	0: No function 1: Backlash compensation function 2: Acceleration and deceleration interrupt waiting function	0	235
10-19	P.230	Dwell frequency at acceleration	0~650.00Hz	1.00Hz	235
10-20	P.231	Dwell time at acceleration	0~360.0s	0.5s	235
10-21	P.232	Dwell frequency at deceleration	0~650.00Hz	1.00Hz	235
10-22	P.233	Dwell time at deceleration	0~360.0s	0.5s	235
10-23	P.234	(Triangular wave function selection)	0: No function 1: Connecting the external TRI signal, the triangular wave function is valid 2: The triangular wave function is valid at any time	0	237
10-24	P.235	Maximum amplitude	0~25.0%	10.0%	237
10-25	P.236	Amplitude compensation at deceleration	0~50.0%	10.0%	237
10-26	P.237	Amplitude compensation during acceleration	0~50.0%	10.0%	237
10-27	P.238	Amplitude acceleration time	0~360.00s/0~3600.0s	10.00s	237
10-28	P.239	Amplitude deceleration time	0~360.00s/0~3600.0s	10.00s	237
10-29	P.247	MC switchover interlock time	0.1~100.0s	1.0s	238
10-30	P.248	Start waiting time	0.1~100.0s	0.5s	238
10-31	P.249	Frequency conversion-power frequency switching frequency	0~60.00Hz 99999: No automatic switching sequence	99999	238
10-32	P.250	Automatic switching operation range	0~10.00Hz: After switching from inverter operation to power frequency operation, the inverter start command (STF/STR) will be turned OFF and then switch to inverter operation 99999: After switching from inverter operation to power frequency operation, the inverter start command (STF/STR) will be turned OFF and then switch to inverter operation, and slow down to stop.	99999	238
10-33	P.273	Power-off stop mode selection	0: No deceleration and stop function at power-off 1: No insufficient voltage avoidance (when power failure due to insufficient voltage, the inverter will slow down and stop) 2: No insufficient voltage avoidance (when power failure due to insufficient voltage, the inverter will slow down and stop. Restore reacceleration during power-off deceleration) 11: There is insufficient voltage avoidance (when power failure due to insufficient voltage, the inverter will slow down and stop) 12: There is insufficient voltage avoidance (when power failure due to insufficient voltage, the inverter will slow down and stop. Restore reacceleration during power-off deceleration)	0	241
10-34	P.274	Subtract the frequency at the beginning of deceleration	0~20.00Hz	3.00Hz	241

Appendix 1: Parameter table

Parameter group	Parameter number	Parameter name	Setting range	Default	Reference page
10-35	P.275	Deceleration processing of start frequency	0~120.00Hz: If the output frequency is≥10-35 (P.275), the deceleration starts from the output frequency-10-34 (P.274); If the output frequency is<10-35 (P.275), the deceleration starts from the output frequency 99999: The deceleration starts from the output frequency-10-34 (P.274)	50.00Hz	241
10-36	P.276	Deceleration time during power failure 1	0~360.00s/0~3600.0s	5.00s	241
10-37	P.277	Deceleration time during power failure 2	0~360.00s//0~3600.0s: Set the deceleration time below the set frequency of 10-38 (P.278) 99999: Set the deceleration time to the set frequency of 10-38 (P.278)	99999	241
10-38	P.278	Deceleration time during power failure switchover frequency	0~650.00Hz	50.00Hz	241
10-39	P.279	UV avoidance voltage gain	0~200.0%	100.0%	241
10-40	P.700	VF separated voltage source	0: Number given 10-41 (P.701) 1: Analog quantity given or HDI pulse given	0	243
10-41	P.701	VF separated voltage value	50Hz/60Hz system setting: 0~440.00V	By voltage	243
10-42	P.702	VF separated voltage acceleration time	0~1000.0s	0.0s	243
10-43	P.703	VF separated voltage deceleration time	0~1000.0s	0.0s	243
10-44	P.704	VF separated shutdown mode selection	0: Frequency/voltage independently reduced to 0 1: Reduce the voltage to zero and then reduce the frequency	0	243
10-45	P.267	Regeneration avoidance operation selection	0: No regeneration and avoidance function 1: The regeneration and avoidance function is valid during operation (automatic mode, automatic calculation of acceleration and deceleration during operation) 2: Regenerative avoidance is valid only at constant speed (automatic mode, automatic calculation of acceleration and deceleration during action) 11: The regeneration and avoidance function is valid during operation (manual mode, acceleration and deceleration are set by 10-49 (P.271) and 10-50 (P.272) during operation) 12: Regenerative avoidance is valid only at constant speed (manual mode, acceleration and deceleration are set by 10-49 (P.271) and 10-50(P.272) during operation)	0	244
10-46	P.268	Regeneration avoidance operation voltage level	310~800V: 440V type	760V	244
10-47	P.269	DC bus voltage detection sensitivity at deceleration	0: Prevent regeneration avoidance from invalidation according to bus voltage change rate 1~5: Set detection sensitivity of bus voltage change rate, the larger the number, the higher the sensitivity.	0	244
10-48	P.270	Regeneration avoidance frequency compensation value	0~10.00Hz: Set the limit of regenerative avoidance frequency compensation 99999: No frequency limit	6.00Hz	244
10-49	P.271	Regeneration avoidance voltage gain coefficient	0~400.0%/0~40.00%(	100.0%	244
10-50	P.272	Regeneration avoidance frequency gain coefficient	0~400.0%/0~40.00%	100.0%	244
10-51	P.264	Over-excitation deceleration selection	0: No over-excitation deceleration function 1: Having over-excitation deceleration function	0	245
10-52	P.265	Over-excitation current level	0~200.0%	150.0%	245
10-53	P.266	Over-excitation gain	1.00~1.40	1.10	245

Parameter group	Parameter number	Parameter name	Setting range	Default	Reference page
10-54	P.362	Short-circuit brake time at PM motor start	0~60.0s	0.0s	245
10-55	P.780	PLC operation selection	0: PLC function invalid 1: PLC function is valid, PLC RUN signal comes from external terminal input signal or 10-56 (P.781). 2: PLC function is valid, PLC RUN signal comes from external terminal input signal.	0	246
10-56	P.781	PLC operation	0: No influence. 1: PLC RUN	0	246
10-57	P.782	PLC erasure	0: Invalid 1: Erase PLC program, the parameter value will be 0 after successful erasing.	0	246
10-58	P.783	PLC component monitoring selection	0~326	0	246
10-59	P.784	PLC component monitoring value	Read only	Read only	246
11-00	P.320	Speed control proportional coefficient 1	0~200.00	10.00	250
11-01	P.321	Speed control integral time 1	0~20.000s	0.500s	250
11-02	P.322	PI coefficient switchover frequency 1	11-25 (P.414)~11-05 (P.325)Hz	5.00Hz	250
11-03	P.323	Speed control proportional coefficient 2	0~200.00	10.00	250
11-04	P.324	Speed control integral time 2	0~20.000s	0.500s	250
11-05	P.325	PI coefficient switchover frequency 2	11-02 (P.322)~650.00Hz	10.00Hz	250
11-06	P.326	Current control proportional coefficient	0~20	0	250
11-07	P.327	PM motor type	0: SPM 1: IPM	0	252
11-08	P.328	PM motor initial position detection method	0: Pull-in mode 1: High frequency pulse vibration mode	0	252
11-09	P.329	PM motor acceleration id	0~200%	80%	252
11-10	P.330	PM motor constant speed id	0~200%	0%	252
11-11	P.331	PM motor estimated speed filtering time	0~1000ms	2ms	252
11-19	P.408	Forward-rotation electronic torque limit	0~400.0%	200.0%	253
11-20	P.409	Reverse-rotation regenerative torque limit	0~400.0%	200.0%	253
11-21	P.410	Reverse-rotation electronic torque limit	0~400.0%	200.0%	253
11-22	P.411	Forward-rotation regenerative torque limit	0~400.0%	200.0%	253
11-23	P.412	Zero-speed proportional coefficient	0~200.00	10.00	250
11-24	P.413	Zero-speed integral time	0~20.000s	0.500s	250

Appendix 1: Parameter table

Parameter group	Parameter number	Parameter name	Setting range	Default	Reference page
11-25	P.414	Zero-speed switching frequency	0~11-02 (P.322)Hz	5.00Hz	250
11-26	P.415	IM motor estimated speed filtering time	0-100.00ms	0	251
11-30	P.371	Second motor speed control proportional coefficient 1	0~200.00 99999	10.00	254
11-31	P.372	Second motor speed control integral time 1	0~20.000s 99999	0.500s	254
11-32	P.373	Second motor PI coefficient switchover frequency 1	0~11-35 (P.376)Hz 99999	5.00Hz	254
11-33	P.374	Second motor speed control proportional coefficient 2	0~200.00 99999	10.00	254
11-34	P.375	Second motor speed control integral time 2	0~20.000s 99999	0.500s	254
11-35	P.376	Second motor PI coefficient switchover frequency 2	11-32(P.373)~650.00Hz 99999	10.00Hz	254
11-36	P.377	Second motor current control proportional coefficient	0~20 99999	0	256
11-37	P.378	Second PM motor type	0: SPM 1: IPM 99999	0	255
11-38	P.379	Second PM motor initial position detection method	0: Pull-in mode 1: High frequency pulse vibration mode 99999	0	255
11-39	P.380	Second PM motor acceleration id	0~200% 99999	80%	255
11-40	P.381	Second PM motor constant speed id	0~200% 99999	0%	255
11-41	P.382	Second PM motor estimated speed filtering time	0~1000ms 99999	2ms	255
11-43	P.366	PM motor speed estimation observer Kp	0~65000	30	255
11-44	P.367	PM motor speed estimation observer Ki	0~65000	10000	255
11-48	P.387	zero-speed bandwidth of velocity loop	0~100.0Hz	5.0Hz	256
11-49	P.388	Low-speed bandwidth of velocity loop	0~100.0Hz	5.0Hz	256
11-50	P.389	High-speed bandwidth of velocity loop	0~100.0Hz	5.0Hz	256
11-51	P.390	Velocity loop self-tuning selection	0: Invalid velocity loop self-tuning function 1: Valid velocity loop self-tuning function	0	256
11-52	P.368	Velocity loop output low-pass filter time constant	0~500.0ms	0	256
13-00	P.89	Slip compensation coefficient	0~10	0	258
13-01	P.246	Modulation coefficient	0.90~1.20	1.00	258
13-02	P.285	Low frequency vibration suppression factor	0~8	5	259

Parameter group	Parameter number	Parameter name	Setting range	Default	Reference page
13-03	P.286	High frequency vibration suppression factor	XX00~XX15	509	259
			00XX ~15XX		
13-04	P.480	Vibration suppression mode	0：vibration suppression disable	1	259
			1：vibration suppression mode 1		
			2：vibration suppression mode 2		
			3：vibration suppression mode 3		
13-05	P.481	Vibration suppression factor	0~100.0	10.0	259
13-06	P.482	Vibration suppression Kp	0~500	50	259
13-07	P.483	Vibration suppression time	0~65000	1010	259
15-00	P.900	User registered parameter 1	P parameter mode: 0~1299 Parameter group mode: 00-00~15-99	99999	261
15-01	P.901	User registered parameter 2		99999	261
15-02	P.902	User registered parameter 3		99999	261
15-03	P.903	User registered parameter 4		99999	261
15-04	P.904	User registered parameter 5		99999	261
15-05	P.905	User registered parameter 6		99999	261
15-06	P.906	User registered parameter 7		99999	261
15-07	P.907	User registered parameter 8		99999	261
15-08	P.908	User registered parameter 9		99999	261
15-09	P.909	User registered parameter 10		99999	261
15-10	P.910	User registered parameter 11		99999	261
15-11	P.911	User registered parameter 12		99999	261
15-12	P.912	User registered parameter 13		99999	261
15-13	P.913	User registered parameter 14		99999	261
15-14	P.914	User registered parameter 15		99999	261
15-15	P.915	User registered parameter 16		99999	261
15-16	P.916	User registered parameter 17		99999	261
15-17	P.917	User registered parameter 18		99999	261
15-18	P.918	User registered parameter 19		99999	261
15-19	P.919	User registered parameter 20		99999	261
16-00	P.1000	Water supply mode selection	0：invalid	0	265
			1：Ordinary water supply mode		
			2：Manual soft start mode		
16-01	P.1001	Pump 1 type selection	0：Invalid pump	0	265
			1：Variable frequency pump		
			2：Pump power frequency		
			3：Dormant pump		
			4：Sewage pump		
16-02	P.1002	Pump 2 type selection	Same as 16-01(P.1001)	0	265
16-03	P.1003	Pump 3 type selection	Same as 16-01(P.1001)	0	265
16-04	P.1004	Pump 4 type selection	Same as 16-01(P.1001)	0	265
16-05	P.1005	Pump 5 type selection	Same as 16-01(P.1001)	0	265

Appendix 1: Parameter table

Parameter group	Parameter number	Parameter name	Setting range	Default	Reference page
16-06	P.1006	Pump 6 type selection	Same as 16-01(P.1001)	0	265
16-07	P.1007	Pump 7 type selection	Same as 16-01(P.1001)	0	265
16-08	P.1008	Manual soft start switching frequency	0~120.00Hz	50.00Hz	265
16-09	P.1009	Add pump pressure tolerance	0.0~100.0%	10.0%	265
16-10	P.1010	Add pump to judge time	0~3600s	60s	265
16-11	P.1011	Add frequency conversion pump switching frequency	0~120.00Hz	50.00Hz	265
16-12	P.1012	Pump running frequency	0~120.00Hz	50.00Hz	265
16-13	P.1013	Processing frequency pump frequency conversion pump deceleration time	0~360.00s/0~3600.0s	10.00s	265
16-14	P.1014	Reduce pump pressure tolerance	0.0~100.0%	10.0%	266
16-15	P.1015	Reduce pump judgment time	0~3600s	60s	266
16-16	P.1016	Reduce pump operating frequency	0~120.00Hz	20.00Hz	266
16-17	P.1017	Acceleration time of variable frequency pump when reducing pump	0~360.00s/0~3600.0s	10.00s	266
16-18	P.1018	Contactor pull delay	0.1~10.0s	1.0s	266
16-19	P.1019	Closing delay of contactor	0.1~10.0s	1.0s	266
16-20	P.1020	Variable frequency pump wheel cycle	0.0~6000.0h	0.0h	266
16-21	P.1021	Power frequency pump wheel cycle	0.0~6000.0h	0.0h	266
16-22	P.1022	Water supply PID hibernation function selection	0 :Hibernation invalid, inverter running PID 1 : Hibernate	0	266
16-23	P.1023	Water dormancy wake up pressure tolerance	0.0~100.0%	10.0%	266
16-24	P.1024	Water wake duration	0 ~ 3600s	60s	266
16-25	P.1025	Dormancy pump dormant period stop judge time	0~3600s	500s	267
16-26	P.1026	Hydraulic overpressure protection collimation	0~200.0%	150.0%	267
16-27	P.1027	Hydraulic overpressure judgment time	0~3600s	500s	267
16-28	P.1028	Hydraulic underpressure protection collimation	0~100.0%	0.0%	267
16-29	P.1029	Hydraulic underpressure judgment time	0~3600s	500s	267

7.2 Appendix 2: Alarm code list

Code	Display on keypad	Reason	Handling method
ERROR	Error	1. Insufficient power supply voltage 2. Reset function RES is “on” 3. Poor contact between operator and inverter host 4. Internal circuit failure 5. CPU malfunction 6. Abnormal load insulation to ground	1. Supplied with normal power 2. Disconnect the reset switch 3. Make sure to connect the keypad with the inverter host -- 4. Replace the inverter 5. Reboot the inverter 6. Check the insulation of the motor cable and the three-phase winding of the motor
OC0 Overcurrent when the inverter stops	OC0	The output current exceeds twice the rated current of the inverter or the load is short-circuited	The inverter may be affected by external electromagnetic noise. Please improve the wiring. Power off and power on again. If this alarm occurs repeatedly, please send it to the factory for repair. (Note 1)
OC1 Overcurrent during acceleration	OC1		1. If there is a sudden acceleration or deceleration, please extend the acceleration and deceleration time. 2. Avoid sharp load increase 3. Check whether the motor terminals U/T1, V/T2, W/T3 are short-circuited (Note 1)
OC2 Overcurrent at constant speed	OC2		
OC3 Overcurrent during deceleration	OC3		
OV0 Overvoltage when the inverter stops	OV0	The voltage between terminals (+ / P)-(-/ N) is too high or the motor is leaking to ground; External power lines have large electrical equipment start and stop affecting grid surges	Check whether the input power supply voltage is normal. (Note 1)
OV1 Overvoltage during acceleration	OV1		1. If there is a sudden acceleration or deceleration, please extend the acceleration and deceleration time. 2. Check whether the regeneration braking resistor between the main circuit terminal +/P-PR falls off 3. If the braking resistor is connected, check whether the setting values of 06-05 (P.30) and 06-06 (P.70) are correct. 4. Check motor insulation to ground 5. Improve grid quality (recommended input reactor) (Note 1)
OV2 Overvoltage at constant speed	OV2		
OV3 Overvoltage during deceleration	OV3		
THT IGBT module overheating	THT	1. IGBT module accumulated heat relay action (overload warning) 2.01-03 (P.3) The setting does not match the rated frequency of the motor. 3. Insufficient input power supply voltage of the inverter reduces output capacity 4.The three-phase input connection of the motor is incorrect	1.Avoid overloading the inverter for a long time 2.Recheck 01-03 (P.3) and motor rated frequency setting 3.Check grid voltage 4. Check whether the motor connection (Y / △) is consistent with the motor nameplate 5. Check if the carrier frequency 00-11 (P.72) is set too high (Note 1)

Appendix 2: Alarm code list

THN Motor overheating	THN	Electronic thermal relay action	1. Check whether the setting value of 06-00 (P.9) is reasonable and correct (based on the rated current of the external motor) 2. Reduce the load
FAN Cooling fan abnormal	FAN	Cooling fan abnormal	1. The fan is damaged, please replace it with a new one 2. Foreign object is blocking the fan, please remove the foreign object 3. Fan wiring is broken / dropped, please replace it with a new one
OHT External motor thermal relay operation	OHT	External motor thermal relay running	1.Check whether the external thermal relay capacity matches the motor capacity 2.Reduce the load 3.Check whether the external connection signal is disconnected or disconnected
OPT RS-485 communication port Peripheral malfunction	OPT	1. Communication error, exceeding the number of communication error retries 2. External noise interference 3. The communication control program logic is unreasonable 4. Communication is interrupted, exceeding the communication interval allowable time	Correctly set communication related parameters It is recommended to use twisted-pair shielded communication lines and the shielding layer is properly grounded. Check communication procedures
PUE PU communication port peripheral malfunction	PUE		
CbE expanded communication port peripheral malfunction	CbE		
EEP Memory malfunction	EEP	ROM malfunction	When this alarm occurs frequently, please send it to the factory for maintenance Avoid frequent communication to modify parameters and save target frequency to EEPROM. Refer to 07-11 (P.34) and target frequency communication address H1002 to prevent premature damage.
PID PID malfunction	PID	1. Insufficient inverter and motor capacity 2. PID target value or feedback value is not set reasonably 3. Peripheral equipment failure 4. The feedback signal is not connected or disconnected during PID control	1.Replace with high-capacity inverter and motor 2.Check the feedback gain setting and reset the target value according to the feedback 3.Check whether the peripheral feedback devices (such as sensors and potentiometers) and wirings of the system are normal.
CPU CPU malfunction	CPU	Serious peripheral electromagnetic interference	Reduce peripheral interference
OLS Stall prevention protection	OLS	Motor overload	1.Reduce motor load 2.Increase the value of 06-01 (P.22)
SCP Overcurrent at short circuit	SCP	1. Short circuit on the output side 2.The inverter incorrectly reports SCP warning	1. Check whether the inverter output is short-circuited (such as motor wiring) 2. The inverter may be interfered by external electromagnetic noise. Please improve the wiring. (Note 1)

NTC Module overheating	nrC	Inverter-side IGBT module temperature is too high	1. Reduce ambient temperature and improve ventilation strips 2. Check whether the inverter fan is running normally 3. Check if the carrier frequency 00-11 (P.72) is set too high
NTC2 Module 2 overheating	nrC2		
NTC3 Module 3 overheating	nrC3		
NTC4 Module 4 overheating	nrC4		
NTC5 Module 5 overheating	nrC5		
NTC6 Module 6 overheating	nrC6		
OL2 Overtorque malfunction	OL2	1.Motor overload 2.Unreasonable setting of 06-08 (P.155) and 06-09 (P.156)	1.Reduce motor load 2.Adjust the settings of 06-08 (P.155) and 06-09 (P.156) appropriately
BE (Note 1) Brake transistor malfunction (Relay malfunction)	bE	Brake transistor malfunction (Relay malfunction)	Please send it to the factory for inspection and maintenance
IPF Power input failure	IPF	Power input failure(Missing phase)	Please check whether the power input is normal
CPR CPU malfunction	CPr	CPU program malfunction	1.Check the wiring 2.Check the parameter setting 3.Reduce peripheral interference
AEr 4-5/3-5 terminal malfunction	AEr	Disconnection malfunction when 4-5/3-5 terminals given by analog	Please refer to parameter description in 02-24 (P.184)/02-33 (P.545)
PTC Motor overheating	PrC	Motor overheating	1.Reduce motor load 2.Modify 06-16 (P.534)
BEB Material disconnection	bEb	Material disconnection	Check whether the signal wirings of material feedback is disconnected
rAE relay abnormal operation	rAE	The main circuit relay is abnormal	Please send to the factory for maintenance
GF Output short-circuit to ground	GF	Output short-circuit to ground	Please check whether the short circuit to ground of the motor is normal
LF Output phase loss	LF	The three-phase output malfunction	Please check whether the UVW three-phase output of the inverter is normal
HDC Hardware detection line malfunction	HdC	Hardware detection line malfunction	Please send it to the factory for inspection and maintenance
ADE Three-phase current sampling circuit malfunction	AdE	Three-phase current sampling circuit malfunction	Please send it to the factory for inspection and maintenance
EbE1 Expansion card SLOT1 malfunction	EbE1	The first result of inverter automatic detection is inconsistent with the next result	Check the connection of expansion board

Appendix 2: Alarm code list

dPF Driving power supply for main circuit malfunction	dPF	Driving power supply for main circuit malfunction	Please send it to the factory for inspection and maintenance

Note 1: Do not power on repeatedly until the cause of the fault is eliminated.

7.3 Appendix 3: Troubleshooting

Malfunction	Key points	
The motor does not run	Main circuit	•Is the voltage between terminals R/L1-S/L2-T/L3 normal? • Is the POWER light on? •Is the wiring between the inverter and the motor correct?
	Load	•Is the load too heavy? •Is the motor rotor locked?
	Parameter settings	•Is the startup frequency (01-11(P.13)) set too high? •Is the operation mode (00-16(P.79)) correct? •Is the upper limit frequency (01-00(P.1)) set to zero? •Is reverse rotation prevention (00-15(P.78)) limited? •Is the signal bias and gain (02-12~02-15, 02-25~02-28/P.192~P.199) correct? •Is the frequency jump (01-16~01-21/P.91~P.96) correct?
	Control circuit	•Is MRS function "on"? (relevant parameters 03-00~03-09(P.80~P.84 、 P.86 、 P.126~P.128、P.550)) •Is RES function "on"? (relevant parameters 03-00~03-09(P.80~P.84 、 P.86 、 P.126~P.128、P.550)) •Is the external thermal relay tripping? •Is there an alarm (ALARM light is on) that has not been reset? •Is the voltage/current signal correctly connected? • Are STF and STR functions correct? (relevant parameters (relevant parameters 03-00~03-09(P.80~P.84、P.86、P.126~P.128、P.550)) •Does the wiring of the control circuit fall off or have poor contact?
Opposite motor rotation direction	•Is the phase sequence of the wiring of the motor terminal (U/T1)/(V/T2)/(W/T3) correct? •Is the wiring of the start terminals STF and STR correct?	
The motor cannot accelerate	•Is the load too heavy? •Is stall prevention level (06-01(P.22)) correct? •Is torque compensation (01-10(P.0)) too high? •Is it limited by the upper limit frequency (01-00(P.1))?	
Unsmooth acceleration and deceleration	•Is the acceleration and deceleration time (01-06(P.7) and 01-07(P.8)) set correctly? •Is the acceleration/deceleration curve selection (01-05(P.29)) correct? •Does the voltage/current signal fluctuate due to noise?	
Excessive motor current	•Is the load too heavy? •Does the inverter capacity match the motor capacity? • Is torque compensation (01-10(P.0)) too high?	
Speed fluctuation in operation	• Does the voltage/current signal fluctuate due to noise? •Has the motor load changed? •Is the main circuit wiring too long?	

7.4 Appendix 4: Optional equipment

7.4.1 Communication card

➢ PD302: Profibus communication card

Terminal form	Terminal name	Function name	Description
DB9	1	---	---
	2	---	---
	3	Rxd/Txd-P	Accept/send data -P
	4	CNTR-P 2)	Control -P
	5	DGND	Data ground
	6	VP 1)	Positive voltage
	7	---	---
	8	Rxd/Txd-N	Accept/send data –N
	9	---	---
1) This signal is only required at the bus cable termination station			
2) These signals are optional			

◆ Order code

NO.	Type	Product name	Order code
1	PD302	PD302 expansion card	SNKPD302

➢ DN301: Devicenet communication card

◆ Devicenet port pin definition

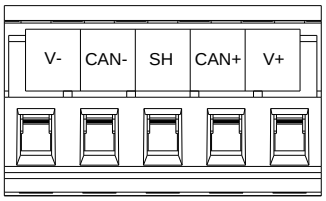

Terminal symbol	Signal	Description
V+	V+	DC24V
CAN+	CAN+	Positive signal wire
SH	SHIELD	Grounding Cable
CAN-	CAN-	Negative signal wire
V-	V-	0V

◆ Order code

NO.	Type	Product name	Order code
1	DN301	DN301 expansion card	SNKDN301

➢ CP301: Canopen communication card

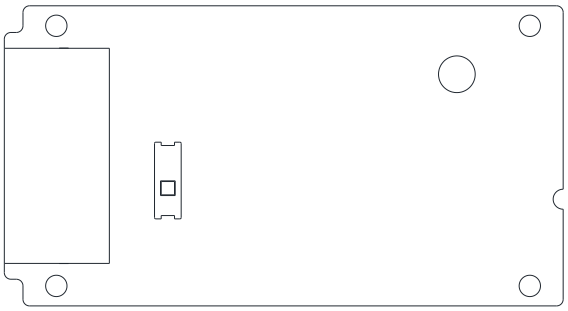

◆ RJ-45

pin definition

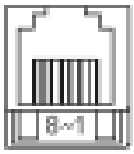

Socket

Pin	Signal	Description
1	CAN_H	CAN_Hbus line (dominant high)
2	CAN_L	CAN_L bus line (dominant low)
3	CAN_GND	Ground terminal /0V/V-
7	CAN_GND	Ground terminal /0V/V-

◆ Functional specifications

Connector	RJ-45
Ports	2 Port
transmission	CAN
Transmission	CAN standard cable
Transmission	1M 500k 250K/280KF 125k 100k 50k
Networking	CANopen protocol

◆ CANopen communication connection wire

Type: SNKCBLxxGTN2 (xx refers to 1R5,3,5,10)

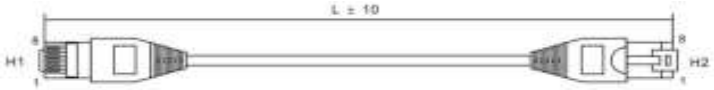

Item No.	Part No.	L(mm)
1	SNKCBL1R5GTN2	1500
2	SNKCBL3GTN2	3000
3	SNKCBL5GTN2	5000
4	SNKCBL10GTN2	10000

◆ Order code

NO.	Type	Product name	Order code
1	CP301	CP301 expansion card	SNKCP301

➢ EP301: Ethernet communication card

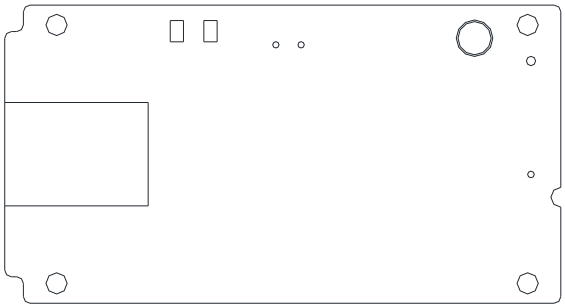

◆ Electric specification

Terminal form	Terminal name	Function name	Description
RJ45	1	Tx+	Send data+
	2	Tx-	Send data-
	3	RX+	Receive data+
	4	---	---
	5	---	---
	6	RX-	Receive data-
	7	---	---
	8	---	---

◆ Ethernet communication connection wire

Type: SNKCBLxxGTN2 (xx refers to 1R5,3,5,10)

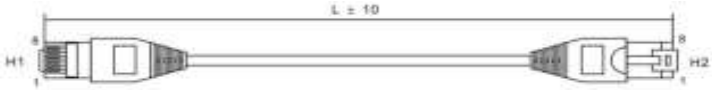

Item No.	Part No.	L(mm)
1	SNKCBL1R5GTN2	1500
2	SNKCBL3GTN2	3000
3	SNKCBL5GTN2	5000
4	SNKCBL10GTN2	10000

◆ Order code

NO.	Type	Product name	Order code
1	EP301	EP301 expansion card	SNKEP301

➢ EC301: EtherCAT communication card

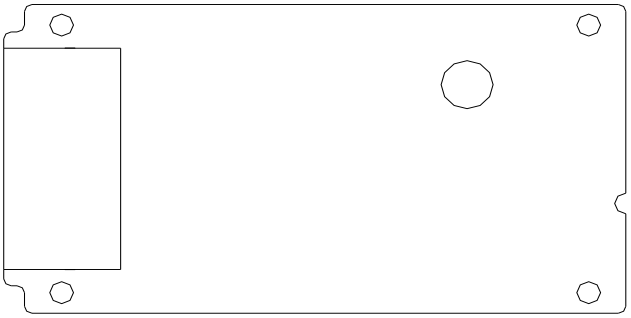

◆ Electric specification

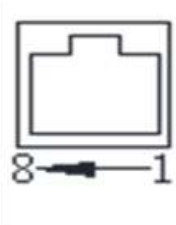

Terminal form	Terminal name	Function name	Description
RJ45	1	Tx+	Send data+
	2	Tx-	Send data-
	3	RX+	Receive data+
	4	---	---
	5	---	---
	6	RX-	Receive data-
	7	---	---
	8	---	---

◆ EtherCAT communication connection wire

Type: SNKCBLxxGTN2 (xx refers to 1R5,3,5,10)

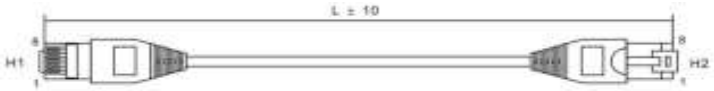

Item No.	Part No.	L(mm)
1	SNKCBL1R5GTN2	1500
2	SNKCBL3GTN2	3000
3	SNKCBL5GTN2	5000
4	SNKCBL10GTN2	10000

◆ Order code

NO.	Type	Product name	Order code
1	EC301	EC301 expansion card	SNKEC301

7.4.2 I/O expansion card

➢ EB362R

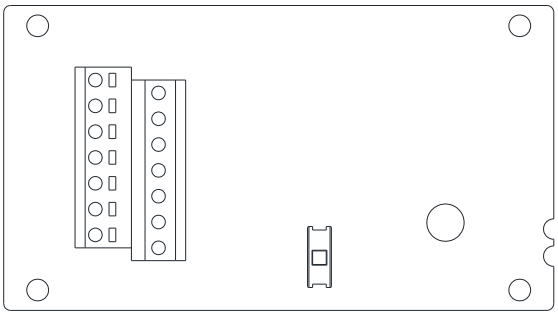

Terminal form	Terminal name	Instruction and functional description	Terminal specifications
Switch signal input	M10	There are totally 6 multi-function expanded digital input terminals (which can be switched between SINK/SOURCE mode)	input impedance: 4.7 kΩ Action current: 5mA Voltage range: 10~28VDC Maximum frequency: 1kHz
	M11		
	M12		
	M13		
	M14		
	M15		
Relay output	A10, C10	2 groups of multi-function relay output; A-C is normal open contact.	Maximum voltage: 30VDC or 250VAC Maximum current: Resistor load 5A NO Inductance load 2A NO (cosΦ=0.4)
	A11, C11		
Common terminal	SD	The COM terminal of M10~M15 (SINK)	----
	PC	The COM terminal of M10~M15 (SOURCE)	Output voltage: 24VDC±20% Maximum current: 200mA (share with control board)

◆ Order code

NO.	Type	Product name	Order code
1	EB362R	EB362R expansion card	SNKEB362R

➢ EB308R

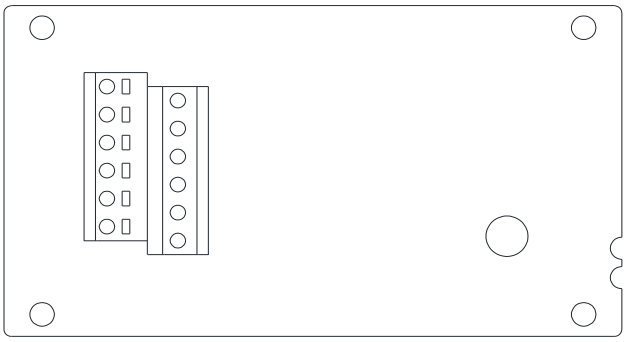

Terminal form	Terminal name	Instruction and functional description	Terminal specification
Relay output	A10, C1	8 groups of multi-function relay output; A-C is normal open contact	Maximum voltage: 30VDC or 250VAC Maximum current: Resistor load 5A NO Inductance load 2A NO (cosΦ=0.4)
	A11, C1		
	A12, C2		
	A13, C2		
	A14, C3		
	A15, C3		
	A16, C4		
	A17, C4		

◆ Order code

NO.	Type	Product name	Order code
1	EB308R	EB308R expansion card	SNKEB308R

7.4.3 Operation panel

➢ PU301, PU301C outside view

PU301

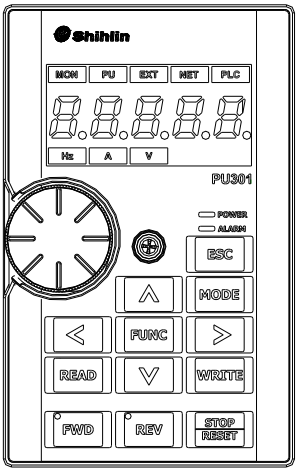

PU301C

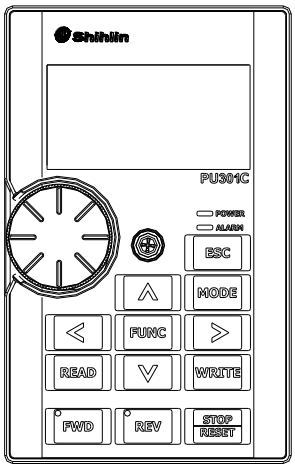

◆ Order code

NO.	Type	Product name	Order code
1	PU301	LED Keypad	SNKPU301
2	PU301C	LCD Keypad	SNKPU301C

◆ Outline dimension drawing

<Outline drawing>

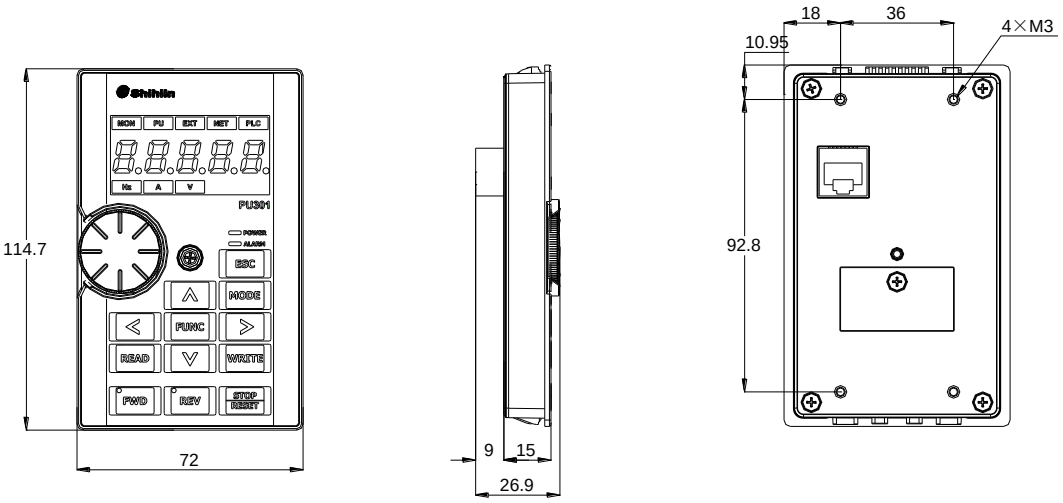

◆ Drawing of hole size for panel installation

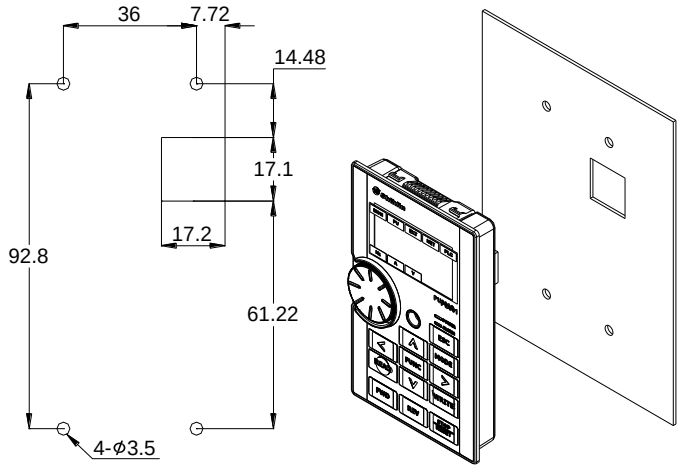

◆ Drawing of hole size for buckle installation

<Dimensional drawing of opening of fastener mounting panel>

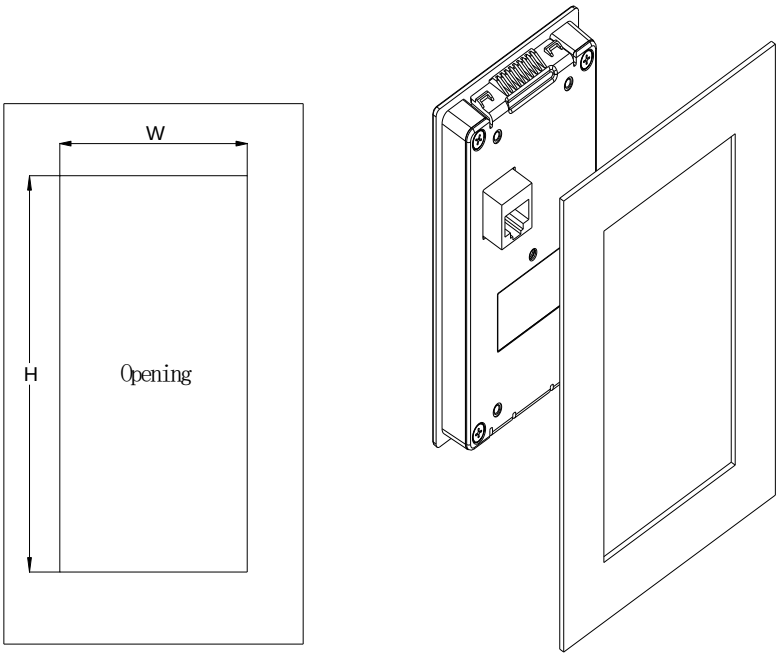

Panel thickness	1.2mm	1.6mm	2.0mm
W	66.4		
H	110.2	111.3	112.5

* Allowable error:±0.15mm

* If the customer's opening precision cannot meet the above allowable error, please choose and buy the accessory SMK301 (snap mounting kit) for installation.

7.4.4 Data transmission line

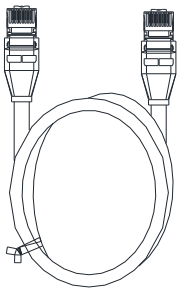

◆ Order code

NO.	Type	Product name	Order code
1	CBL1R5GTN2	Data transmission line (1.5m)	SNKCBL1R5GTN2
2	CBL03GTN2	Data transmission line (3m)	SNKCBL03GTN2
3	CBL05GTN2	Data transmission line (5m)	SNKCBL05GTN2
4	CBL10GTN2	Data transmission line (10m)	SNKCBL10GTN2

7.4.5 Snap mounting kit

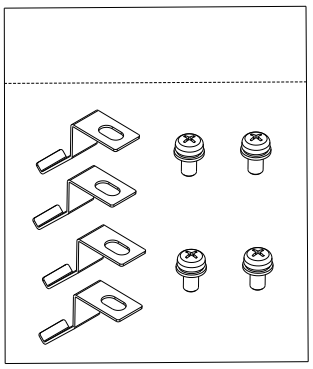

◆ Order code

NO.	Type	Product name	Order code
1	SMK301	PU301, PU301C Snap mounting kit	SNKSMK301

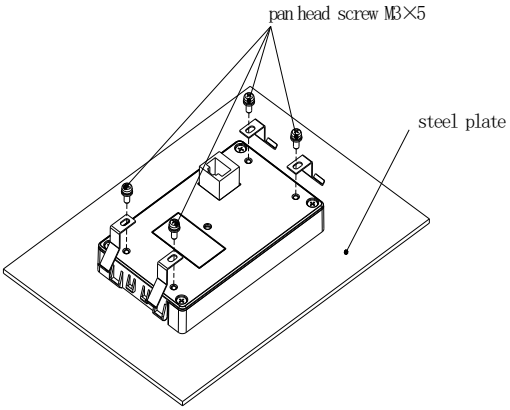

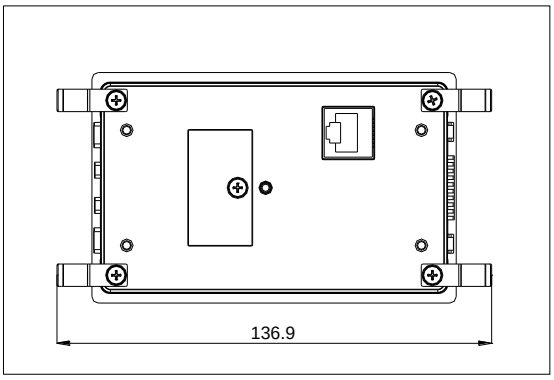

7.4.6 BKU brake unit

➢ BKU

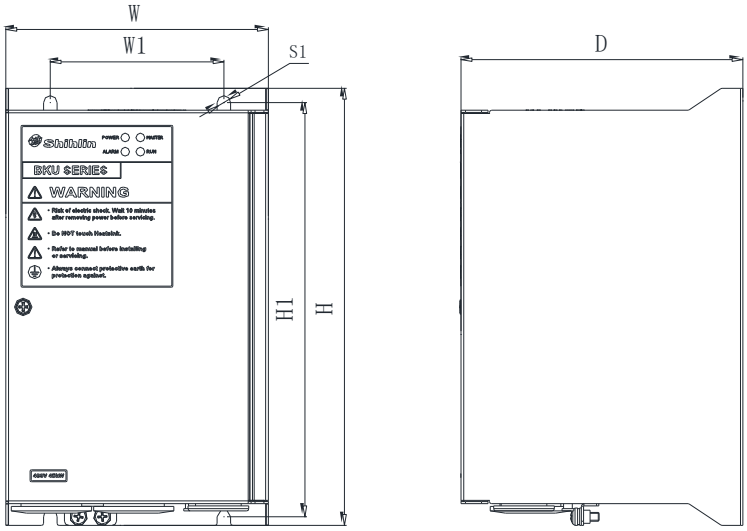

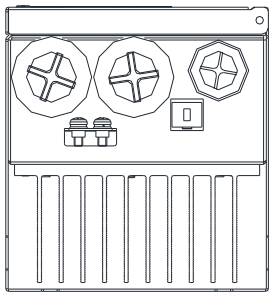

Frame	Types	W	W1	H	H1	D	S1
A	BKU-040-45K	121	80	200	189.5	130	6.4
B	BKU-040-160K	233.5	193.5	343	329	190	6.4

◆ Order code

NO.	Type	Product name	Order code
1	BKU-040-45K	400V 45KW brake unit	SNKBKU04045K
2	BKU-040-160K	400V 160KW brake unit	SNKBKU040160K

7.5 Appendix 5: European specification compatibility description

The inverter hereof with CE symbol meets the specification:
Low Voltage Directive 2014/35/EU & Electromagnetic Compatibility Directive 2014/30/EU

1. Electromagnetic compatibility instructions:

(1). Description of EMC:

As far as system integration is concerned, the inverter is not a single device with independent function. It is usually one of the parts in the control cabinet, which is combined with other devices to control the machine or equipment. Therefore, not all EMC instructions are deemed to be needed to directly applicable to the inverter by the Company hereof. Based on the above reason, the CE symbol of this inverter has no extension property.

(2). Compatibility:

The inverter does not need to cover all EMC instructions. However, for some machines/equipment that need to apply EMC instructions and use the inverter hereof, if the machines/equipment must have CE symbol, the Company has prepared EMC verification data and operation manuals to facilitate the simple assembly of the machines/equipment containing the inverter to achieve the required EMC specification.

(3). Installation method outline:

Please install the inverter according to the following requirements
*Please use a noise filter conforming to European regulations to match the inverter.
*Please use shield wire or metal conduit to handle wirings between motor and inverter. Grounding the motor end and the inverter end together. Please shorten the wiring length as much as possible.
*Please install the inverter hereof in a grounded metal box, so as to isolate radiation interference.
*Apply a line-to-line noise filter at the power-supply end and use a magnetive cord at the control line to suppress noise.

Please refer to the operation manual for all information and details of filter specifications conforming to European regulations. If you have any questions, please feel free to contact your sales agent.

2. Low voltage command (LVD):

(1). Description of low voltage command compatibility:

The inverter hereof is compatible with low voltage command.

(2). Compatibility:

The Company hereof declares itself to be in compliance with the low voltage instruction specifications.

(3). Description:

*In addition to use leakage protector to prevent man-made electric shock, please ensure proper grounding protection.
*Please make separate grounding for individual special inverters (Please do not connect 2 or more grounding cables).
*Please use no-fuse breaker and magnetic contactor conforming to EN or IEC specifications.
*Please use this inverter under the condition of overvoltage category II and pollution level 2, or better conditions.
*For the cable type and dimension on the input side and output side of the inverter, please select the specifications recommended in the operation manual.

EU-Declaration of Conformity

Herewith we(manufacture):	
Name:	**Suzhou Shihlin Electric & Engineering Corporation**
Address:	**NO.88, Guangdong St., Suzhou New District, Jiangsu, China.**

Declare that the following Appliance complies with the appropriate basic safety and health requirements of the EU Directives(see item 4) and the relevant Union harmonisation legislation based on its design and type, as brought into circulation by us.

The object of the declaration is identification of electrical equipment allowing traceability.

The declaration relates exclusively to Shihlin products in the state in which it was placed on the market, and excludes components which are added and/or operations carried out subsequently by the final user.

This declaration of conformity is issued under the sole responsibility of the manufacture.

1	Product name:	**Inverter**
2	Model/Type:	SF3 Series (Reference the attached list of catalogue numbers)
3	Batch or Serial number:	Reference the attached list of catalogue numbers
4	Application EU Directives:	Low voltage Directive 2014/35/EU EMC directive 2014/30/EU
5	Used harmonized Standards:	LVD: EN61800-5-1:2007 EMC: EN61800-3:2004+A1:2012
6	Signed for and on behalf of:	Suzhou Shihlin Electric & Engineering Corporation
7	Print Name, Function(Title of Signature)	Anne Yang, Director
8	Signature	Anne Yang
9	Place and date of issue	Suzhou of China, 2019. 9. 19
	Manufacturer Statement: √ We shall give the manufacturer full name and address, registered trade name or registered trade mark, and true Batch/series no., "xxxx-xxxx" in the EU declaration and on the product(marking plate), or where that is not possible, on its packaging or in a document accompanying the product. √ We shall keep the technical documentation referred to in Annex III and the EU declaration of conformity for 10 years after the electrical equipment has been placed on the market.	

Catalogue numbers:

Series name	*Model name*	*Serial number* [1]
SF3 Series	*SF3-043-5.5K/3.7KG-xy, SF3-043-7.5K/5.5KG-xy, SF3-043-11K/7.5KG-xy, SF3-043-15K/11KG-xy, SF3-043-18.5K/15KG-xy, SF3-043-22K/18.5KG-xy, SF3-043-30K/22KG-xy, SF3-043-37K/30KG-xy, SF3-043-45K/37KG-xy, SF3-043-55K/45KG-xy, SF3-043-75K/55KG-xy, SF3-043-90K/75KG-xy, SF3-043-110K/90KG-xy, SF3-043-132K/110KG-xy, SF3-043-160K/132KG-xy, SF3-043-185K/160KG-xy, SF3-043-220K/185KG-xy, SF3-043-250K/220KG-xy, SF3-043-280K/250KG-xy, SF3-043-315K/280KG-xy, SF3-043-355K/315KG-xy*	/

1) If no series number is given, then all series are covered
2) xy: denote any alphanumeric suffix

8. Revision record

Printing date	Manual version	Revised content
September 2018	V1.00	First edition
September 2019	V1.01	Add 3.1 INVERTER INTRODUCTION：Rated input current
March 2020	V1.02	Add 5.14 Water Supply Parameter Group 16 Modify 7.2 Optimization of alarm handling 7.3 Abnormal situations and countermeasures
June 2020	V1.03	Add 5.12.3 Vibration inhibition Modify 2.1 & 3.2 Output frequency range : 0-599Hz
January 2021	V1.04	Add 5.2.13 Remote function acc/dec time selection 5.7.24 Fire mode 5.9.12 PID pressure range setting 5.9.13 PID unit selection 5.9.14 PID Analog signal feedback loss Modify Modify and improve part of the parameter description

Version: V1.04